RCA

RCA represents one of the non-standard data cabinet solutions. Its` construction is right from the beginning designed to concentrate an office network infrastructure under one of the office tables.

HIGH RIGIDITY CONSTRUCTION

Cabinet has a robust welded construction. High quality processing and the up-to-date technology ensure a perfect look of the cabinet.

DOOR

The cabinet has fully glass door in standard. It can be steel or perforated if required.

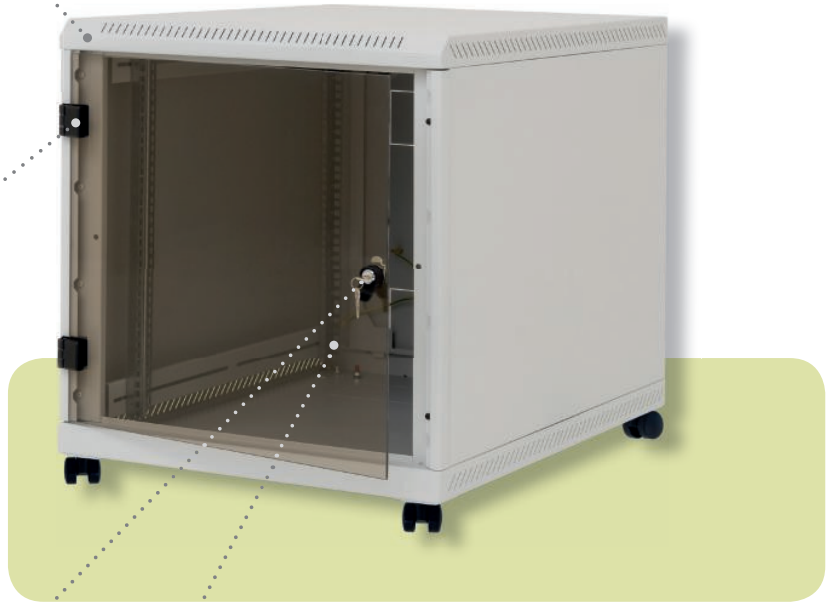

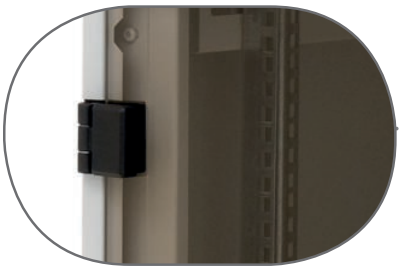

FLEXIBLE DOOR OPENING

The hinge system enables almost 180° wide opening of the door. Doors can be easily removed.

DOOR LOCK

It enables an easy and quick access into the cabinet.

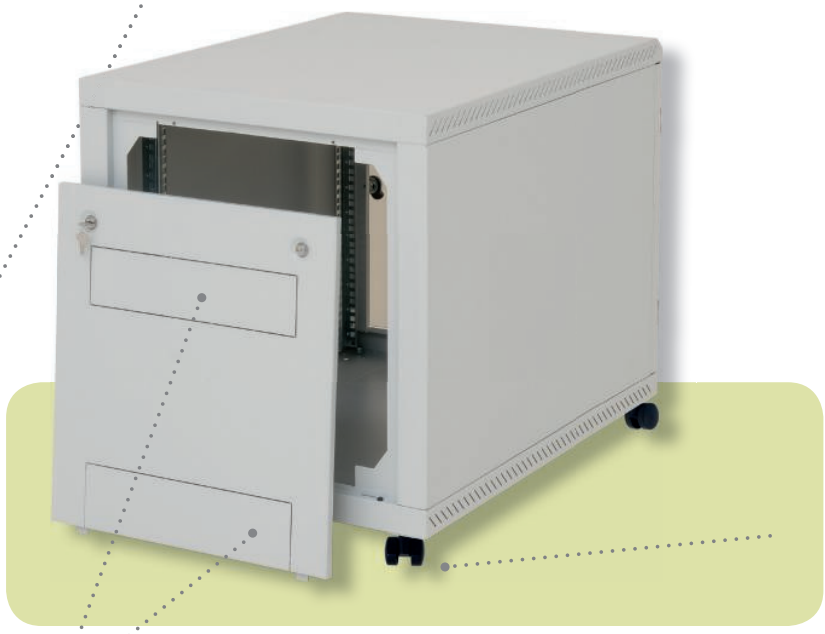

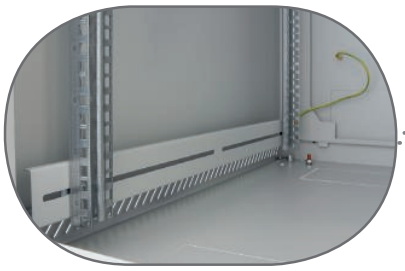

ADJUSTABLE VERTICAL RAILS

Cabinet contains two pairs of freely adjustable 19" rails. Versions deeper than 800 mm are delivered with one additional pair of the middle vertical rails.

BREAKOUT-TYPE BLANKING PANELS

Cable openings covered with breakout-type blanking panels are located in the bottom and rear part of the cabinet.

RCA (DELTA C)								
TYPE	**A**	**B**	**C**	**D**	**E**	**Weight gross (kg)**	**Weight net (kg)**	**Maximal recommended load (kg)**
	(mm)							
RCA-12-A68-CAX-A1	620	515	490	600	800	48.0	40.1	200
RCA-12-A69-CAX-A1	620	515	490	600	900	53.2	43.4	
RCA-12-A61-CAX-A1	620	515	490	600	1000	56.3	45.9	

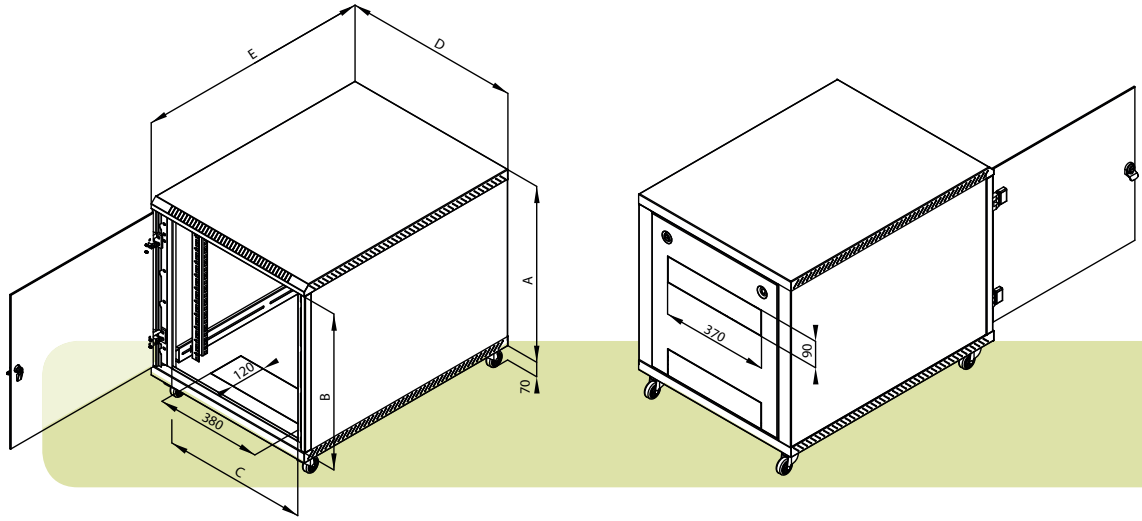

CASTORS

This type of cabinet is installed on castors (included in the supply). Two of them are with a brake.

RCA CONTAINER CABINET

DESCRIPTION, PURPOSE OF USE

- 19" container cabinet with IP 30 protection
- Cabinet is intended to be placed on castors under a work desk.
- The cabinet includes two pairs of vertical rails (three pairs at cabinets deeper than 800 mm).
- Cabinet construction:
  - compact welded cabinet
  - glass door: safety hardened glass, thickness 5 mm
- Max. permissible load of the door is 10 kg.
- Min. thickness of the surface finish is 65 µm.
- Cabinets are intended for installation of data and telecommunication devices and their distribution systems.
- The frame of the cabinet and all the removable parts are connected with earthing cables that have to be properly fixed and inserted into connectors during all the time when using the cabinet.
- There is one M8 screw placed on the bottom part of the cabinet as an earthing main point.
- Cable openings covered with breakout-type blanking panels are placed in the top and the bottom part of the cabinet rear side, others are in the bottom side of the cabinet.

OPERATION CONDITIONS

- Operation environment:
  - office
  - the cabinet is not intended for outdoor installations and for installations in environment that can influence negatively the functionality of the cabinet and the mounted devices (e.g. environment with danger of explosion or humid and wet surroundings)
- Must be protected against:
  - mechanical damage
  - improper manipulation
  - a different usage than the cabinet is intended for
- Improper manipulation is especially:
  - overloading (maximum recommended load exceeding)
  - device installation that can influence negatively operation and function of the cabinet or the installed equipment
  - change of the construction or design of the cabinet

INSTALLATION OF THE CABINET

- This type of cabinet is installed on castors (included in supply). Two of them are with brake.

ENVIRONMENT PROTECTION

- All parts are made of recyclable materials and after its discard, it is necessary to dispose the cabinet according to valid regulations.

CERTIFICATE AND CONFORMITY

- This product is fully in accordance with ČSN EN 62208 (357040), (EN 62208:2003), (idt IEC 62208:2002)