BEST CONTACTS FOR YOUR SUCCESS

Telegärtner

KARL GÄRTNER GMBH

NETWORKING COMPONENTS

COAXIAL CONNECTORS

CABLE ASSEMBLIES

PRECISION TURNED PARTS

PLASTIC INJECTION MOULD PARTS

INDUSTRIAL ELECTRONICS

Data / Network Technology

Basic Knowledge

including Network Dictionary

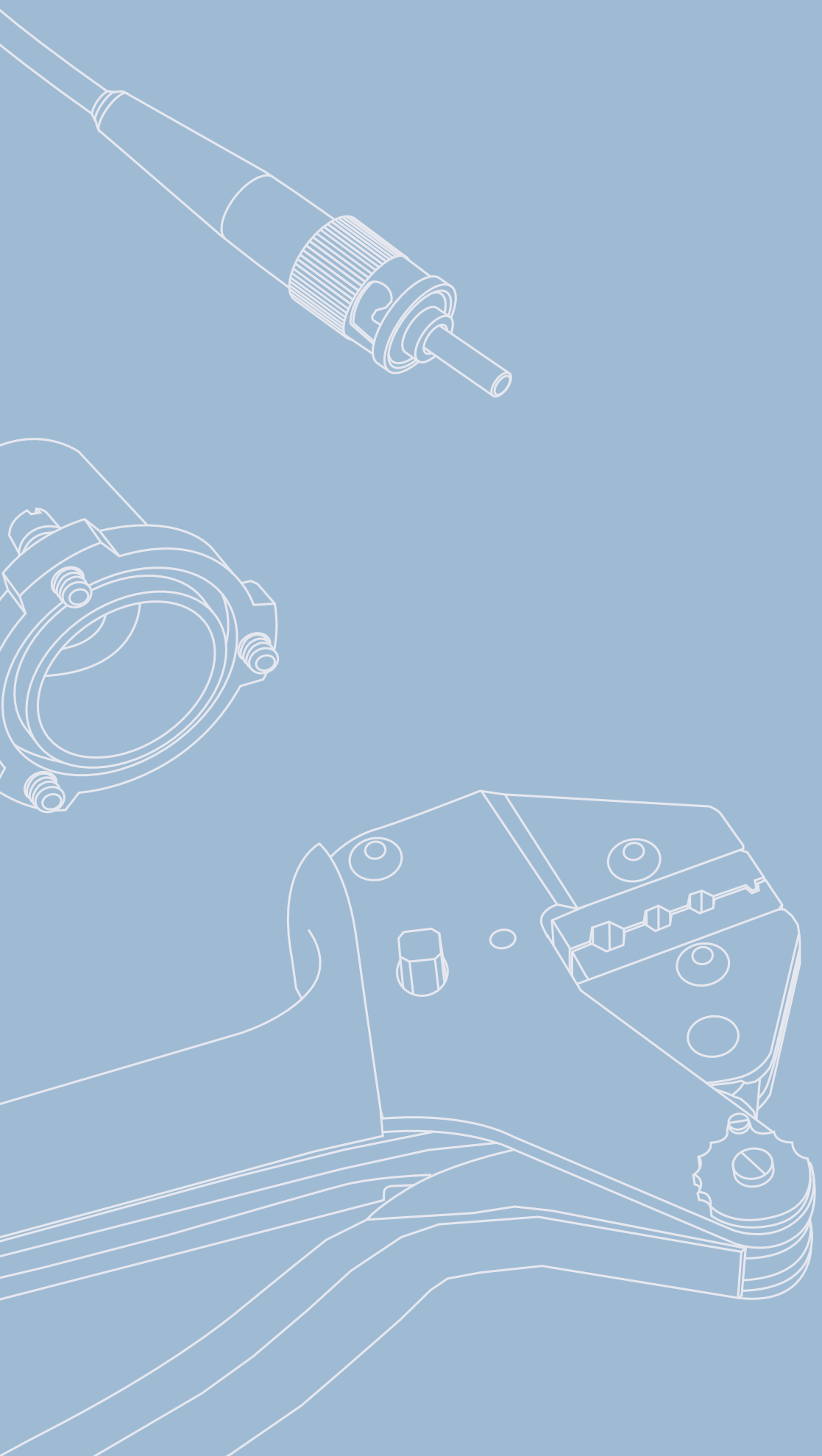

Data / Network Technology

Basic Knowledge

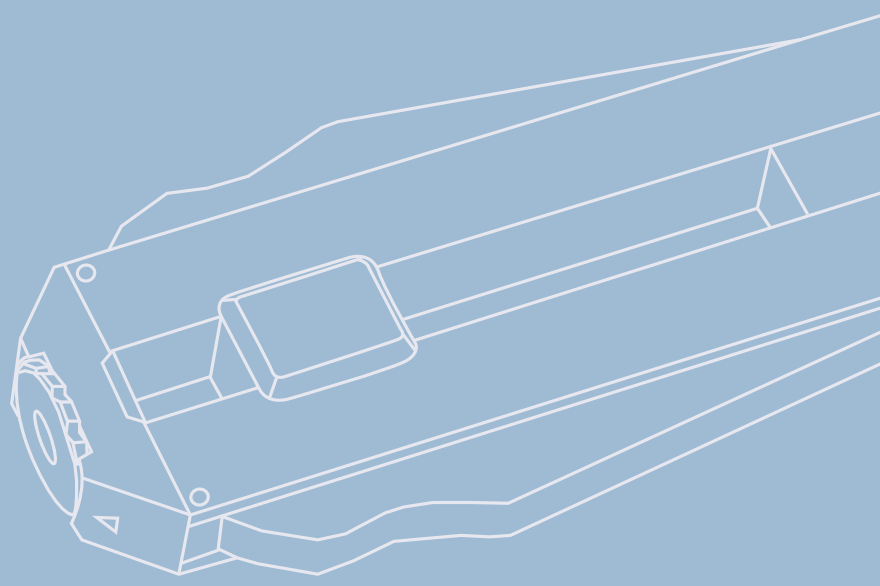

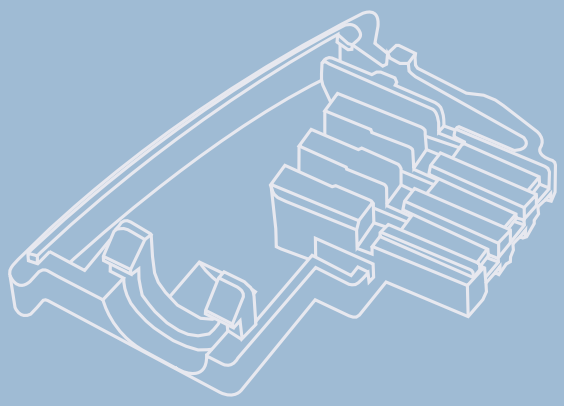

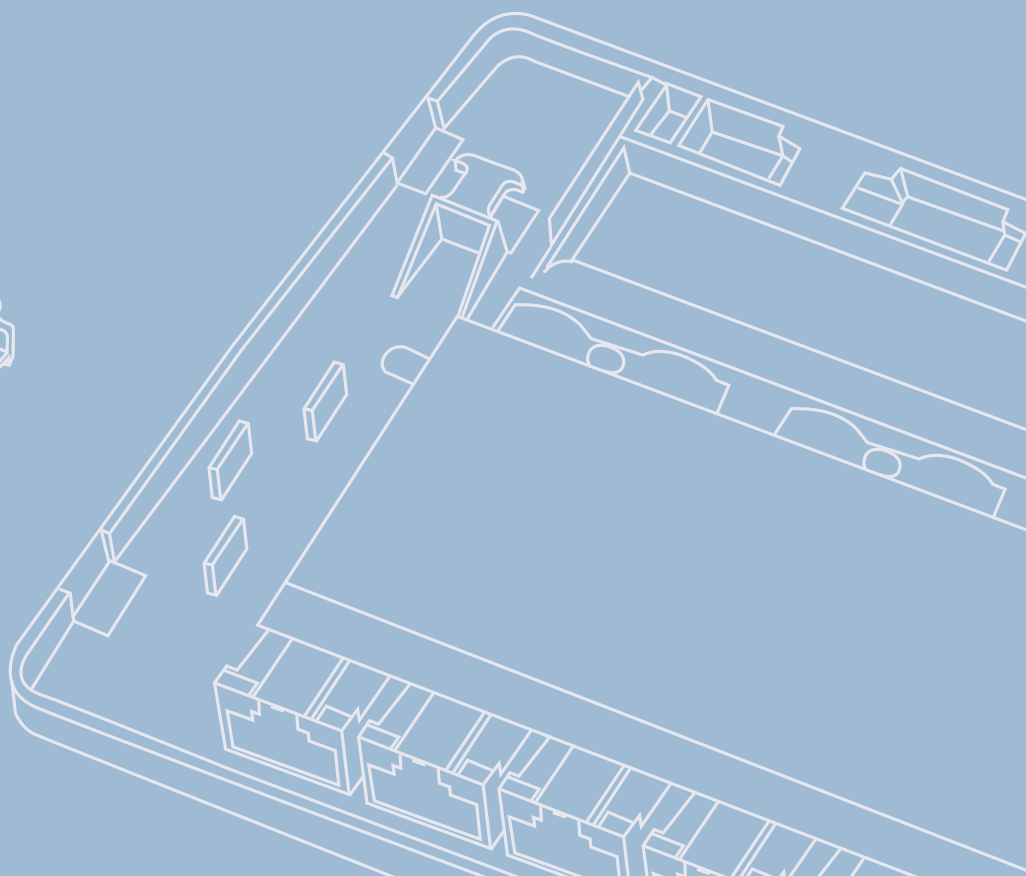

General

The history of data communications is closely linked to the developments in cabling and connecting hardware. High performance data networks and local area networks (LANs) cannot perform well without appropriate cables and excellent connectors.

When we take a look at high-speed data networks like-Gigabit and 10 Gigabit Ethernet, it's hard to imagine that data networks descended from telephone networks. Telegärtner has set quite some trends from the early beginnings.

The Ethernet version 10Base-2 was running over coaxial cable. With Telegärtner's uninterruptable EAD outlets, computers could be added or removed while the network is running. Soon, the screened version scEAD followed, and even 2010 there are still some coaxial networks with EAD/scEAD outlets in use.

EAD/scEAD

TAE Outlet

Plug

BNC Connector

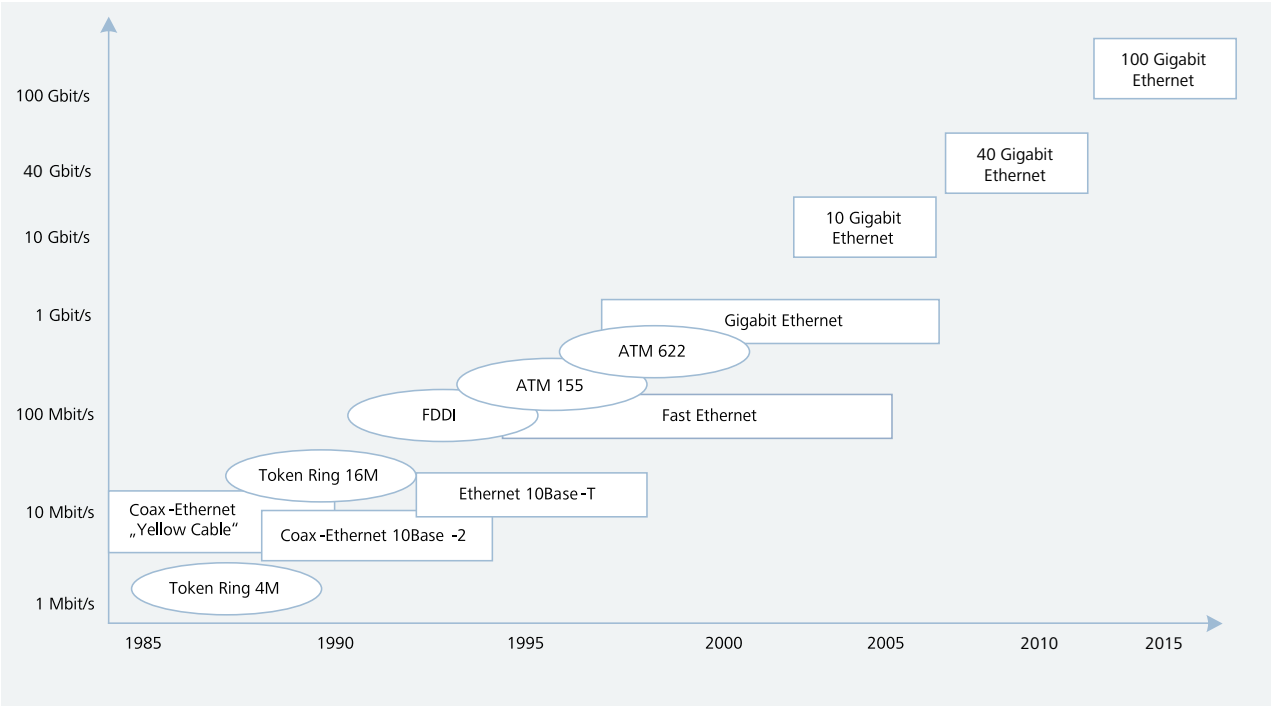

Evolution of LAN technologies: Ethernet has become the dominant technology for local area networks (LANs). Most common are Fast Ethernet with 100 Mbps and Gigabit Ethernet with 1 Gbps. For high speed networks, 10 Gigabit Ethernet offers 10 Gbps, and 40 and 100 Gigabit Ethernet will soon offer even higher data rates.

Copper Networks

Structured Cabling

The demand for vendor independent and neutral cabling led to the international standard ISO/IEC 11801 with it's European version EN 50173. These standards define a structured cabling which shall be designed independent of the use or dedication of rooms or any network technology. The standards also contain performance specificatons for components and links, as well as appropriate testing methods.

Structured cabling consists of the horizontal cabling, the building backbone, and the campus backbone. The campus backbone runs between buildings on the same campus. Apart from telephone cables, only fiber optic cables are used to connect the buildings to a central campus distributor.

The cabling to connect the floor disributors to the building distributor following a star topology is called building backbone. According to the standards, each floor should have at least one floor distributor. However, it is also possible to use one floor distributor for several floors should they be sparsely populated.

The horizontal cabling runs from the floor distributor to the outlets. Mainly twisted-pair cabling is used here, but fiber optic cabling might offer some advantages depending on the size of the network and the details of the individual cabling project. In a lot of projects the data cabling is also used for telephony.

Telephones need another pin assignment than Ethernet, but when all pins of a jack are connected to the cable, the outlet can be used for either telephone or data. Telephone and data over the same cabling is called a converged network.

Example of RJ45 outlet from Telegärtner

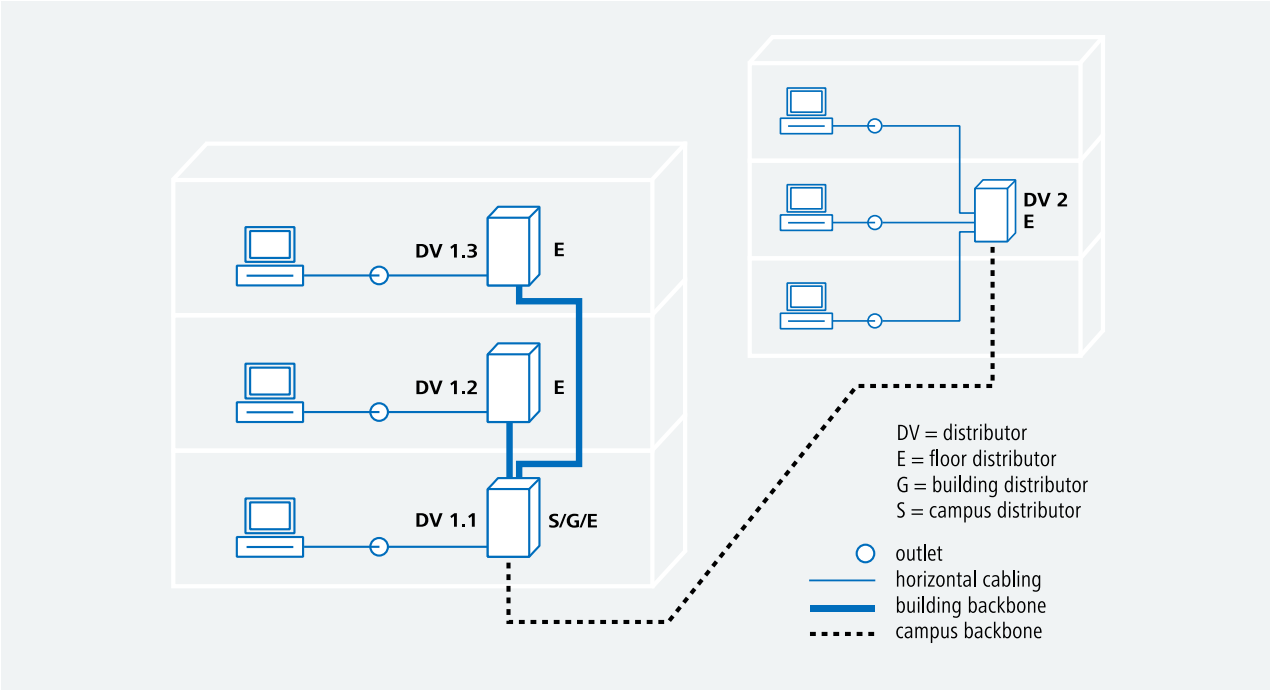

An example of structured cabling

DIN EN 50173

The first editions of ISO/IEC 11801 and EN 50173 were published in 1995. In 1999/2000, addenda were published with the requirements for Gigabit Ethernet over copper cable.

The first editions and addenda of both standards defined systems up to 100 MHz (Class D/Cat.5). In the United States, EIA/TIA defined a Cat.5e for cabling supporting Gigabit Ethernet. New editions of the EN 50173 were published in 2003 and 2007. Currently, components for 10 Gigabit Ethernet with a bandwidth of 500 MHz (Class E_A / Category 6_A) are used.

DIN EN 50173 has become a series of five standards, focusing on different environments and scenarios:

DIN EN 50173-1:2007	General requirements
DIN EN 50173-2:2007	Office premises
DIN EN 50173-3:2007	Industrial premises
DIN EN 50173-4:2007	Residential premises
DIN EN 50173-5:2007	Data centers

Telegärtner's tip: Always make sure to use the right software according to the specific standard with the test equipment.

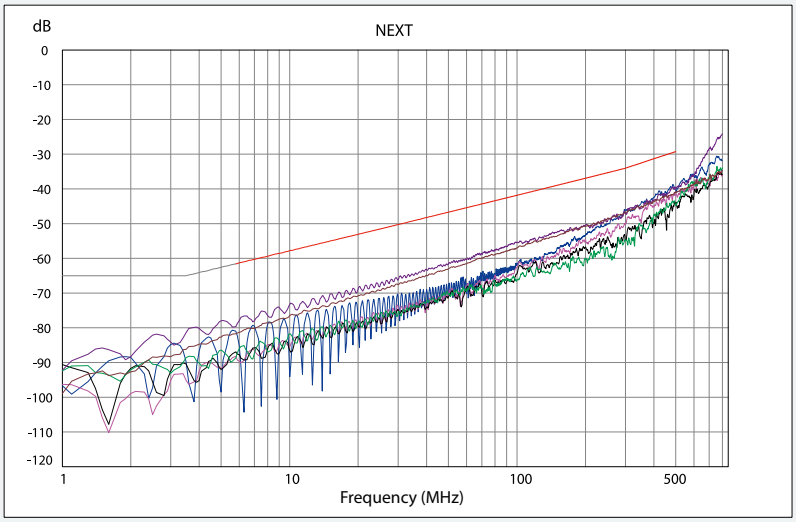

High system reserve of Telegärtner Cat.6_A connection components measured in 90 m Class E_A Permanent Link in accordance with ISO/IEC 11801

TIA-568

Apart from ISO / IEC 11801, the American standard TIA-568 is very common in the United States. Currently, the fourth issue of TIA-568 is published as TIA-568-C, which replaces all preceding ones, including TIA-568-B.

Some specifications of TIA-568-C differ from the ones in ISO / IEC 11801 and thus EN 50173. TIA-568 applies only for North America unless explicitly stated in tenders and project descriptions.

The set of TIA-568-C consists of four parts:

TIA-568-C.0:	Generic Telecommunications Cabling for Customer Premises
TIA-568-C.1:	Commercial Building Telecommunica tions Standard
TIA-568-C.2:	Balanced Twisted-Pair Telecommunications Cabling and Components Standard
TIA-568-C.3:	Optical Fiber Cabling Components Standard

Permanent Link and Channel

EN 50173 defines multiple performance levels. Some terms quickly: „Class“ always applies to the whole cabled link, of which permanent link and channel are two examples. The permanent link comprises the components that will stay permanently in place, so in most installations this means patch panel, horizontal cable, and outlet.

„Channel“ means the whole connection between two electronic devices like a PC and a switch, including all necessary patch cords (very often, the channel consists of the permanent link and the patch cords). In most cases, the channel will only be tested when problems have occured to make sure that the whole cabling is fine. After the installation is done, nearly always the permanent link is tested. The reason for this is simple: Following the test procedures for the channel would mean that all of the patch cords had to remain plugged into the outlets and patch panels.

Telegärtner's tip: Always check whether the permanent link or the channel has to be tested – they have different specs.

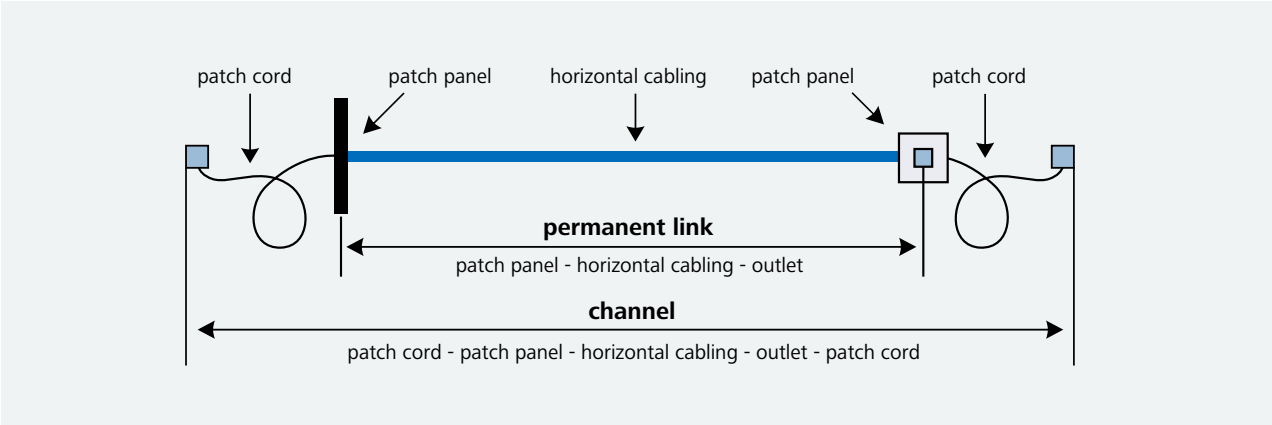

Permanent link and channel

2, 3 and 4 connector model

EN 50173 defines three different types of permanent links, depending on the amount of connectors used. The connections directly at the electronics like switches or at the equipment like PCs are not taken into consideration.

The simplest model is the 2 connector model: just one connection at the patch panel and one at the information outlet.

The most demanding model is the 4 connector model, which adds two more connections to the ones of the 2 connector model: a cross connect and a consolidation point. The 3 connector model just uses either a cross connect or a consolidation point.

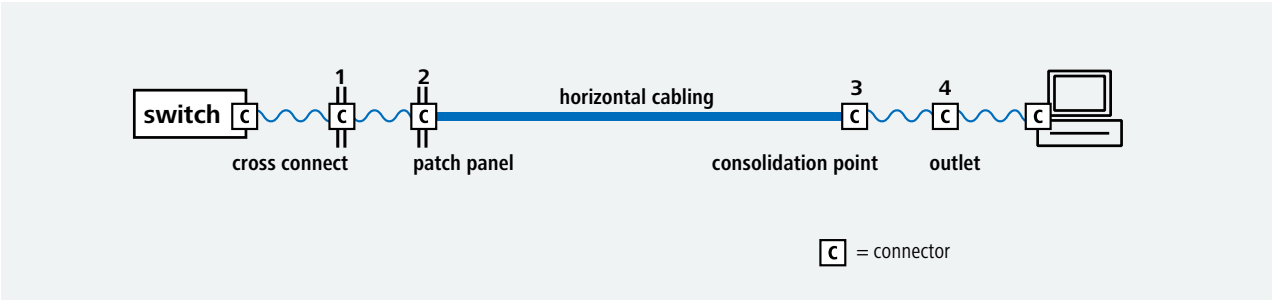

4 connector model

Cabling with Consolidation Point

Sometimes it is useful to lay a bundle of horizontal cables between the floor distributor and a consolidation point, which is made of a group of outlets or a small distributor. From the consolidation point, cables are run to fixed or mobile outlets, to which PCs are connected. An example of a consolidation point is a small distributor, installed in suspended ceilings or cellular floors in open-plan offices or for industry solutions, where cover plates or utility columns provide flexibility. Floor outlets may also serve as consolidation points when patch cords plugged in, which are not connected to PCs but to other outlets in desks or furniture. With a consolidation point, a link may contain up to four connections (4 connector model): Patch panel, consolidation point, outlet, and cross connect (mainly used in the USA, not very common in Europe). The connections at the networking devices (PC and switch/hub) are outside the scope of this model.

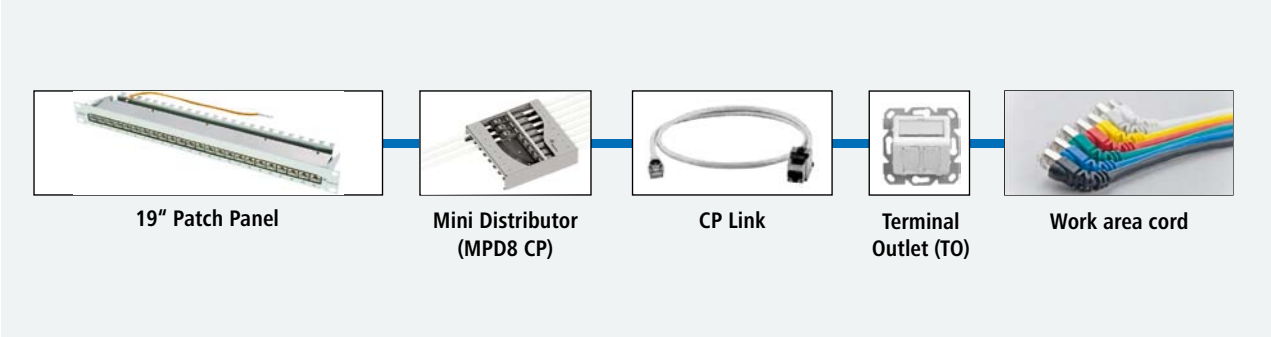

Cabling with consolidation point

Class and Category

„Class" means something completely different than „category". The class (or category link in American English) always applies to the installed link, the category as such applies only to one single component, e.g. the cable or the outlet; the component is tested and verified by either the labs of the manufacturer or independent verification labs. The installed link is always tested according to classes (or category links).

Cabling classes according to ISO/IEC:

Class D:	frequency range up to 100 MHz, for data rates up to 1 Gbps
Class E:	frequency range up to 250 MHz, for data rates up to 1 Gbps
Class E_A:	frequency range up to 500 MHz, for data rates up to 10 Gbps
Class F:	frequency range up to 600 MHz, for multi-media applications
Class F_A:	frequency range up to 1,000 MHz, for multi-media applications

Component categories according to ISO/IEC:

Category 5:	frequency range up to 100 MHz, for data rates up to 1 Gbps
Category 6:	frequency range up to 250 MHz, for data rates up to 1 Gbps
Category 6_A:	frequency range up to 500 MHz, for data rates up to 10 Gbps
Category 7:	frequency range up to 600 MHz, for multi-media applications
Category 7_A:	frequency range up to 1,000 MHz, for multi-media applications

The correct spelling of Class E_A and Category 6_A: Originally, an „a" in lower case was used. Later on, TIA and ISO agreed to use an „A" in upper case. ISO (and thus Cenelec) use the „A" in subscript ($_A$), TIA uses it in the same level as „6":

Link and Channel according to ISO:	Class E_A
Link and Channel according to TIA:	Category 6A link
Components according to ISO:	Category 6_A
Components according to TIA:	Category 6A

Telegärtner's tip: When testing class E_A links or links with Cat.6_A components, always make sure that the tester uses the correct settings according to ISO/IEC 11801 – Ed2 Add.2.

Cabling systems versus Mix & Match

According to the 2007 editions of ISO/IEC 11801 and EN 50173, the selection of cabling components will be determined by the class of applications to be supported by the cabling. Cables and connections of different categories may be mixed within a channel. However, the resultant cabling performance will be determined by the category of the lowest performing component.

Even though the cabling standards were created to offer the possibility of using components from different vendors in the same link, standard compliant links („mix & match") might lead to serious problems. The specifications allow

large tolerances, and different vendors may use different ways of eliminating capacitive and inductive interference. It may well happen that components of standard compliant systems cause reflections of the signal, which lead to high bit error rates. The system becomes slow and offers only poor performance.

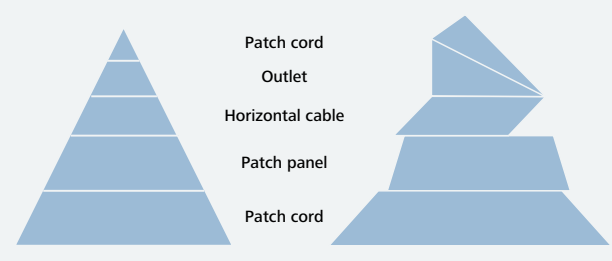

Cabling systems and mix & match

Twisted pair cables

ISO developed a standardized, systematic naming for the different types of construction of twisted pair cables. The first letter stands for the overall screen, the second one – separated by a slash – stands for the element screen. „S“ means braid screen, „F“ means foil screen. „TP“ stand for twisted pair, the balanced element.

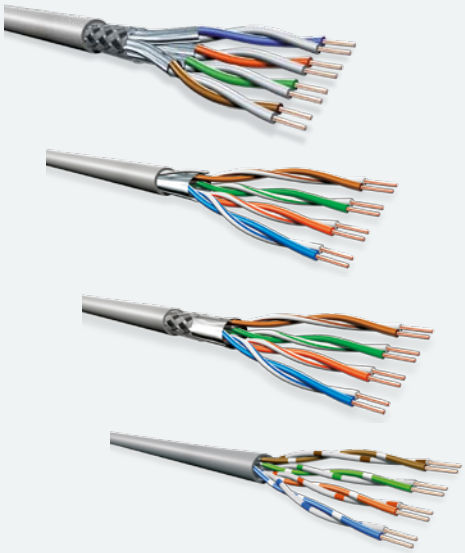

Different types of twisted pair cables

S/FTP:
overall braid screen (S),
elements foil screened (FTP)

F/UTP:
overall foil screen (F),
elements unscreened (UTP)

SF/UTP:
overall braid and foil screen (SF),
elements unscreened (UTP)

U/UTP:
no overall screen (U),
elements unscreened (UTP)

Twisted pair cables are available with solid and stranded conductors.

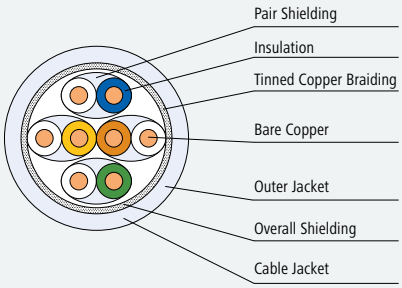

solid

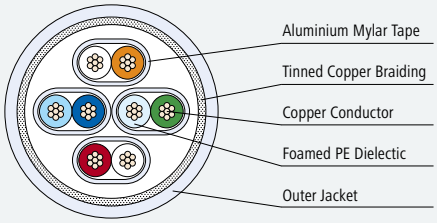

stranded

Connecting hardware

The RJ45 has become the dominant connector for copper cabling. The term "RJ45" is not standardized, but it's widely used. The standard series EN 60603-7 (international: IEC 60603-7) specifies the RJ45 in both, shielded and unshielded versions, and from category 5 to category 6_A.

The American standard EIA/TIA 568 defines two different colour codings for RJ45 plugs and jacks. The colour coding T568A was originally developed for the military. T568B, which was developed for civil use, has become common for most installations by now.

The colour codings of EIA/TIA are not contradictory to EN 50173. EN 50173 points to EN 50174, which contains both coding schemes. Either one may be used, but both ends of the cable have to be connected in the same manner.

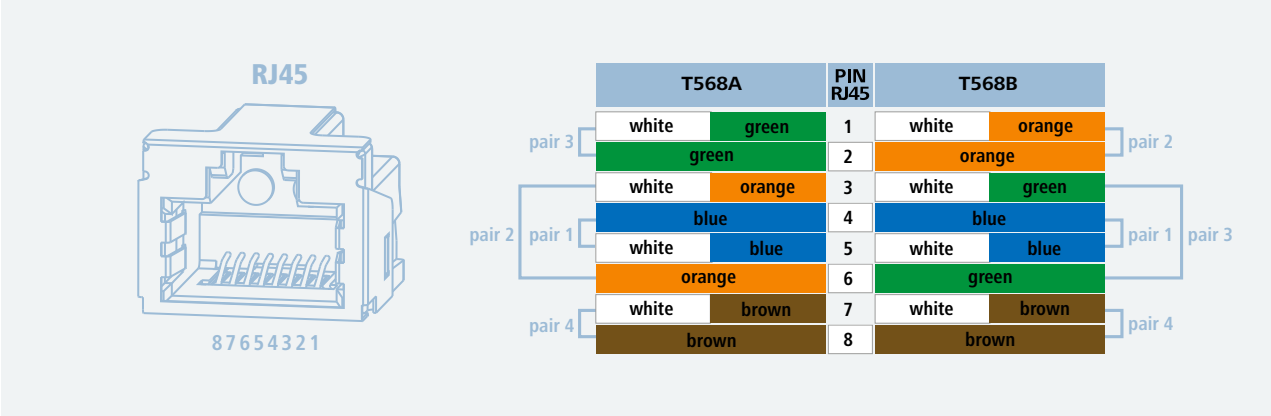

RJ45 pin assignment and colour coding

RJ45 jacks should have an integrated protection against overbending the contacts. When the cord of a telephone or a fax machine with an RJ11 or RJ12 connector is plugged into an RJ45 jack, the outer contacts (1/2 and 7/8) can be damaged. RJ11 and RJ12 connectors are similar to the RJ45, but they are a bit smaller. An integrated protection against overbending protects the contacts of the jack. Even after many "mispluggings", the jack can transmit high data rates without any problems.

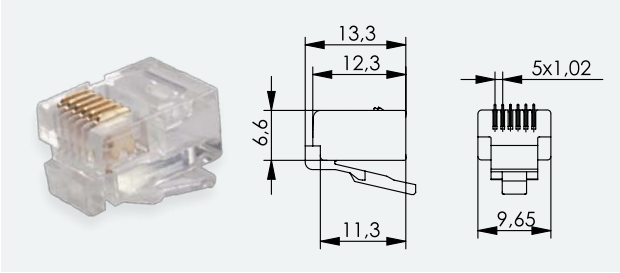

RJ12

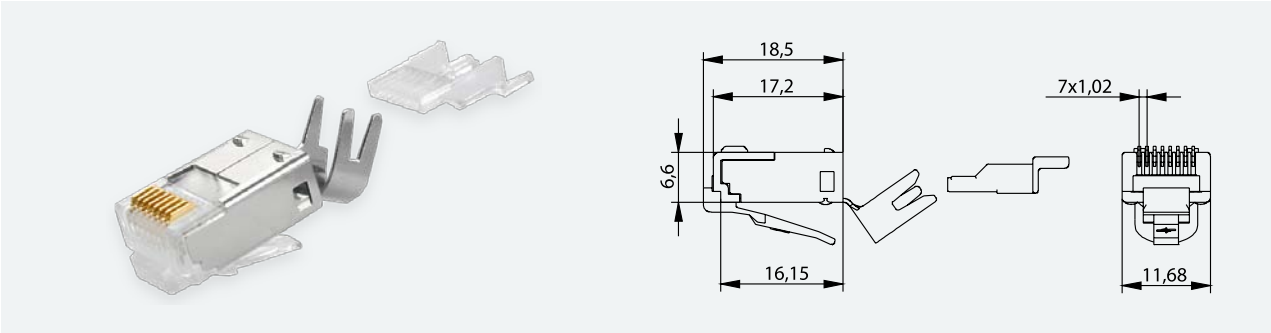

RJ45

Outlets with boards or individual modules

The problems of ever growing data rates and at the same time cost pressure demanding shorter installation time were successfully solved by the modular design of the connecting hardware. In the old days, outlets contained small printed circuit boards to which the jacks were soldered.

Now the jacks are mounted directly on the end of the cable and just snapped into the frame of the outlet or the patch panels. Each cable is terminated on both ends with an individual jack. This leads to a much better electrical performance of the link and to an enormous time saving when terminating the cables and installing the connecting hardware. An additional benefit: Individual links can be added later at much lower costs.

Either concept works, and Telegärtner offers both, of course. The AMJ K Cat 6_A was the first board based outlet with LSA+ contacts and Cat.6_A performance verified by the independent test lab GHMT worldwide.

RJ45 outlets with board and individual modules, both Cat.6_A compliant for 10 Gigabit Ethernet

Horizontal cables do not necessarily have to be terminated with a jack. When they are terminated with a plug, they can be inserted into an outdoor housing of an IP surveillance camera, for example. There is no need anymore for an outlet near the camera. This benefit is also welcome by industrial applications, and even in residential cabling the outlet can be omitted – in many installations there is no space for an outlet anyway. Good plugs can be mounted on site and can be used for any application, from analogue telephony up to 10 Gigabit Ethernet.

MFP8 connector by Telegärtner: Toollessly mounted on site in less than 60 seconds, and ready to transmit 10 Gigabit Ethernet

Power over Ethernet (PoE)

With PoE, the devices can be powered using the data cable. The American standards body IEEE has specified PoE in the documents IEEE 802.3af and IEEE 802.3at:

Standard	IEEE 802.3af	IEEE 802.3at
Issued	June 2003	September 2009
Voltage	48 V DC	53 V DC
Maximum power at power sourcing equipment	15 W	30 W
Maximum power at powered device	12.95 W	24.6 W
Maximum current per pair	350 mA	600 mA

Source Treiber: Praxishandbuch Netzwerktechnik, courtesy of J. Schlembach Fachverlag

PoE and PoE + demand high quality connecting hardware as the small contacts have to transmit data and power at the same time.

Telegärtner's tip: All Cat.6_A jacks and plugs made by Telegärtner can be used for PoE and PoE + up to 30 W.

De-embedded / Re-embedded

The cabling infrastructure of high speed data networks calls for high tech testing, especially when testing individual components. The de-embedded testing method was developed for cat. 6 components. It uses a reference jack which has to be tested with 12 different plugs to ensure it can cope with the complete spectrum of mix & match applications.

Of course, this leads to different margins with the different connectors, and all of them have to be standard compliant. De-embedded testing is precise enough for testing individual components of category 6 up to 250 MHz for data rates up to 1 Gbps. Despite of this effort, this testing method is not precise enough for testing cat. 6_A components up to 500 MHz for data rates up to 10 Gbps. With de-embedded testing, a jack under test was tested as a single, stand-alone item. Re-embedded testing test the jack re-embedded into the board, it tests "the whole thing". Re-embedded testing uses a reference plug with well-known margins. It also uses two test heads, which are connected to a network analyzer. One of this heads has a soldered receptacle for the reference plug; the jack to be tested is connected to the other test head using twisted pairs. Then the two test heads are connected and tested.

Re-embedded testing using multiple boards according to IEC 60512 is still not precise enough for Telegärtner: In the Telegärtner's test lab, the board with the reference jack is directly connected to the network analyzer using coaxial cables. This has the benefit of eliminating near-end crosstalk (NEXT) and effects caused by interference among the twisted pairs. The special testing procedure with coaxial cable enables higher precision than the procedure according to IEC 60512.

Telegärtner Real-Time Re-Embedded Cat.6_A

Using an 8-port network analyzer with implemented re-embedding calculation, the Real-Time Re-Embedded test procedure by Telegärtner makes real-time evaluation of connecting hardware possible. With this, effects of any changes of the device under test can be tracked in real-time. The time consuming testing of all pair combinations belongs to the past.

REAL-TIME
RE-EMBEDDED

Cat.6_A Patch Cords

In many installaitons, patch cords are ignored – with unpleasant consequences, as the cabling infrastructure will not reach it's full performance when low-cost patch cords degrade the quality of the channel. But how can one tell that a specific path cord is a high quality product?

Cat.6_A components have been tested using the re-embedded test procedure for quite a while by now, but patch cords haven't – the physics made it next to impossible.

Once again, Telegärtner lead the way: The Telegärtner test lab was the fist test lab worldwide that was able to test cat.6_A patch cords. The test procedure is more advanced and more precise than specified by international standards. Telegärtner uses Real-Time / Re-Embedded testing, which tests all four pairs simultaneously with an 8-port network analyzer. This high-end test procedure without baluns leads to much more precise test results and sets the trend for testing high-quality patch cords. This ensures that the channel can transmit the full data rate.

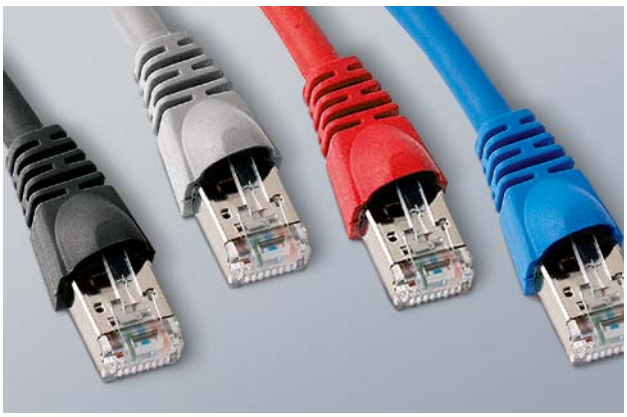

Fiber Optic Networks

Design of optical fiber

State of the art fiber optic cables contain multimode fibers with graded refraction index (marked with a „G“) or singlemode fiber (marked with an „E“). Loosely, one can assume that several rays of light (modes) travel along a multimode fiber in different ways, whereas in singlemode fibers only one of them does so (these „rays“ stand for the main distribution of electromagnetic energy that satisfies Maxwell’s equations and boundary conditions in guided wave propagation).

The light is guided in the inner part of the fiber. The outer part ensures that only light that doesn’t exceed a certain angle can enter the fiber, that it will be guided travelling along the fiber, and that light which left the inner part may not reenter causing signal irritation. The inner part of a fiber is called core, the outer part cladding. As core and cladding are made of glass with different refraction indices, light will be reflected at the border (total relfection).

Thus, a maximum of light will be guided through the fiber core. In Europe, multimode fibers with a core diameter of 50 µm are common, in the USA it’s mostly 62.5 µm. The two multimode fiber types may not be mixed in the same link, for that would lead to a heavy loss of light, especially when light travels from the 62.5 into the 50 µm fiber. The core diameter of singlemode fibers is typically 9 to 10 µm, depending on the fiber manufacturer. The outer diameter of all of the fiber types mentioned above is 125 µm.

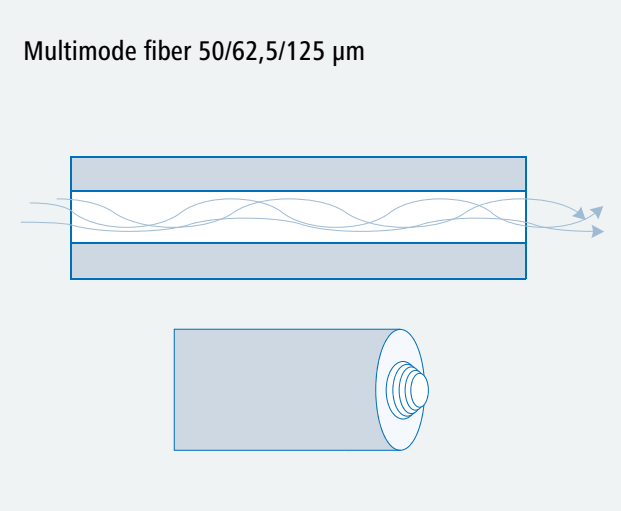

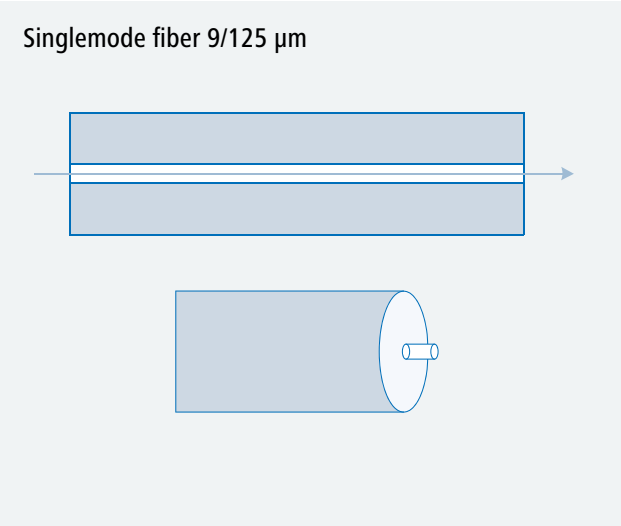

Optical fiber (simpified)

Optical fibers and their performance

ISO/IEC 11801 and EN 50173-1:2003 specify different performance categories for optical fibers. There are four of them for multimode fiber (OM1 to OM4) and two for singlemode (OS1 and OS2, with OS1 fibers being superseded by OS2 by now). LEDs usually work fine at transmission rates up to 100 Mbps. Gigabit and 10 Gigabit Ethernet use lasers, as LEDs can’t be switched on and off fast enough.

Cost-effective VCSELs (vertical cavity surface emitting lasers) work at 850 nm. For other wavelengths such as 1310 nm or 1550 nm, standard lasers have to be used.

Maximum attenuation in dB / km							
	Multimode OM1, OM2 and OM3		Multimode OM4		Singlemode OS2		
Wavelength	850 nm	1300 nm	850 nm	1300 nm	1310 nm	1383 nm	1550 nm
Attenuation	3.5 dB	1.5 dB	3.5 dB	1.5 dB	0.4 dB	0.4 dB	0.4 dB

		Min. modal bandwidth in MHz x km		
		Overfilled Launch Bandwidth		Effective Laser Launch Bandwidth
Wavelength		850 nm	1300 nm	850 nm
Fiber	Core diameter (µm)			
OM1	50 or 62.5	200	500	not specified
OM2	50	500	500	not specified
OM3	50	1500	500	2000
OM4	50	3500	500	4700

Source: Treiber: Praxishandbuch Netzwerktechnik, courtesy of J. Schlembach Fachverlag

Telegärtner's tip: Optical fibers should always be tested with the type of light source they will be used with for data transmission. Most optical testers (optical time domain reflectometer, OTDR) typically use standard lasers. However, depending on the type of Ethernet, LEDs and VECSELs are used with multi¬mode fibers instead of standard lasers. The wrong source of light might lead to wrong test results.

Plastic optical fibers

Optical fibers do not necessarily have to be made of glass. They can partially or completely be made of plastic.

Polymeric optical fibers, also called plastic optical fibers or POF, are completely made of plastic. Unlike glass fibers, polymeric optical fibers cannot be fusion spliced together, as the plastic would just melt.

POFs are connected using connectors or clamps. With sharp knives, POFs can be cut precisely, and there is no need to polish the fiber ends.

Hard clad silica fibers (HCS), also called polymer cladded fibers (PCF), have a core made of glass and a cladding made of plastic. Because of the glass core, HCS fibers offer higher bandwidth and longer link lengths than polymeric optical fibers, but they need a more sophisticated installation process than POFs do.

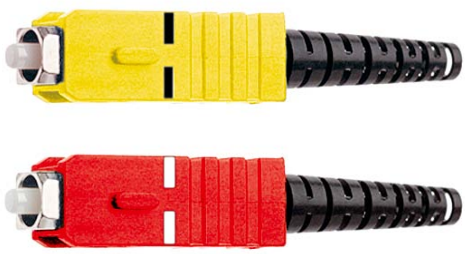

Connectors for polymeric optical fibers

Bend-insensitve optical fibers

Bend-insensitive optical fibers have a lot of advantages in installations with very tight space. Such fibers can be layed in very narrow turns and still offer the full bandwidth. But not all of them are backwards compatible with common optical fibers.

Bend-insensitve singlemode fibers are specified in the ITU-T G.657 standard. Fibers of the G.657.A series are backwards compatible with standard singlemode fibers as specified in ITU-T G.652. Fibers of the G.657.B series in most cases aren't, but they have a smaller minimum bending radius than the ones of the A series.

Depending on the manufacturer, bend-insensitive multimode fibers (BIMMF) might be backwards compatible with conventional OM3 and OM4 fibers. A look at the data sheet is highly recommended, an explicit statement of the manufacturer will help best.

WDM systems

Low waterpeak fibers are very important for WDM systems. WDM stands for wavelength division multiplexing. Where standard systems send light of only one wavelength along a singlemode fiber, WDM systems send multiple rays of light of different wavelengths simultaneously along one single fiber.

Each channel is assigned to an individual wavelength, and to ensure a constant transmission of all signals, the physical properties of the fiber must be the same for all of the channels, i.e. for all of the appropriate wavelengths. Today, WDM systems can only rarely be found in the LAN environment, but still low waterpeak fibers have to be minded when designing or installing new networks to ensure that the future migration towards WDM will be possible without changing the cables again.

Fiber optic connectors

EN 50173 specifies the LC duplex fiber optic connector for the work area (outlets). In legacy installations where the older SC duplex connector is used, links with SC duplex can still be added. For any other area all other connectors specified by IEC standards are allowed.

ST connectors

Telegärtner's tip: Never look into fiber optic connectors or jacks. VCSELs and standard lasers emit invisible infrared light which can cause serious health hazards.

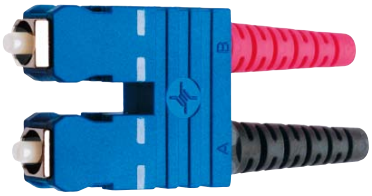

SC connectors

Many manufacturers of networking devices have begun to use small form factor (SFF) connectors like the LC duplex as they consume not more space than RJ45 jacks. It has to be minded, though, that a high density of connectors in patch panels or consolidation points might proof to be disadvantageous as far as handling, robustness, and clearness are concerned.

In legacy installations, ST connectors can be found alongside with the SC duplex and the LC duplex.

LC connectors

To achieve best possible optical performance, connectors for singlemode fibers are also available in an angled version. Because of the sloping surface of the tip of the connector, reflected light cannot return into the mode field of the fiber but is reflected away from the connector end.

Telegärtner's tip: Never plug connectors with a rectangular end (physical contact connector, PC) and connectors with a sloping surface (angled physical contact connectors, APC) into the same coupling. When using APC connectors make sure that slope of both connectors in one coupling has the same angle.

Standardized colour code for fiber optic connectors according to EN 50173-1:

Multimode: beige or black

Singlemode PC, rectangular connector tip
(PC = physical contact): blue

Singlemode APC, angled connector tip
(APC = angled physical contact): green

Connectors and couplings for OM3 multimode fibers are often colored aqua as specified in the American TIA standard.

	Connector	Patch cord	Pre-assembled installation cable
OM1	beige	orange	orange
OM2	beige	orange	orange
OM3	aqua	aqua	orange
OM4	black	orange	orange
OS2 PC	blue	yellow	yellow
OS2 APC	green	yellow	yellow

Colour scheme: connectors, patch cords, pre-assembled installation cables

Fiber to the Home (FTTH)

High speed internet, Triple Play (TV, telephone and internet via the same connection), video on demand or DSL links connecting company headquarters with subsidiaries need powerful infrastructures. Legacy cabling has grown over decades and very often can't compete anymore. It's only logical to extend the powerful fiber optic cabling of the wide area network and bring it closer to the end-user: fiber to the home.

Optical coupler

FTTH calls for a large product portfolio of optical couplers, optical fibers, fiber optic connectors and even coaxial connectors and application-specific RJ45 connectors for office, home and industrial applications.

Contact us at fttx@telegaertner.de.

Telegärtner's tip: The expression „fiber to the ..." is often used in different ways. It is recommended to add information on the network design (using fiber optic outlets, installation switches, etc.).

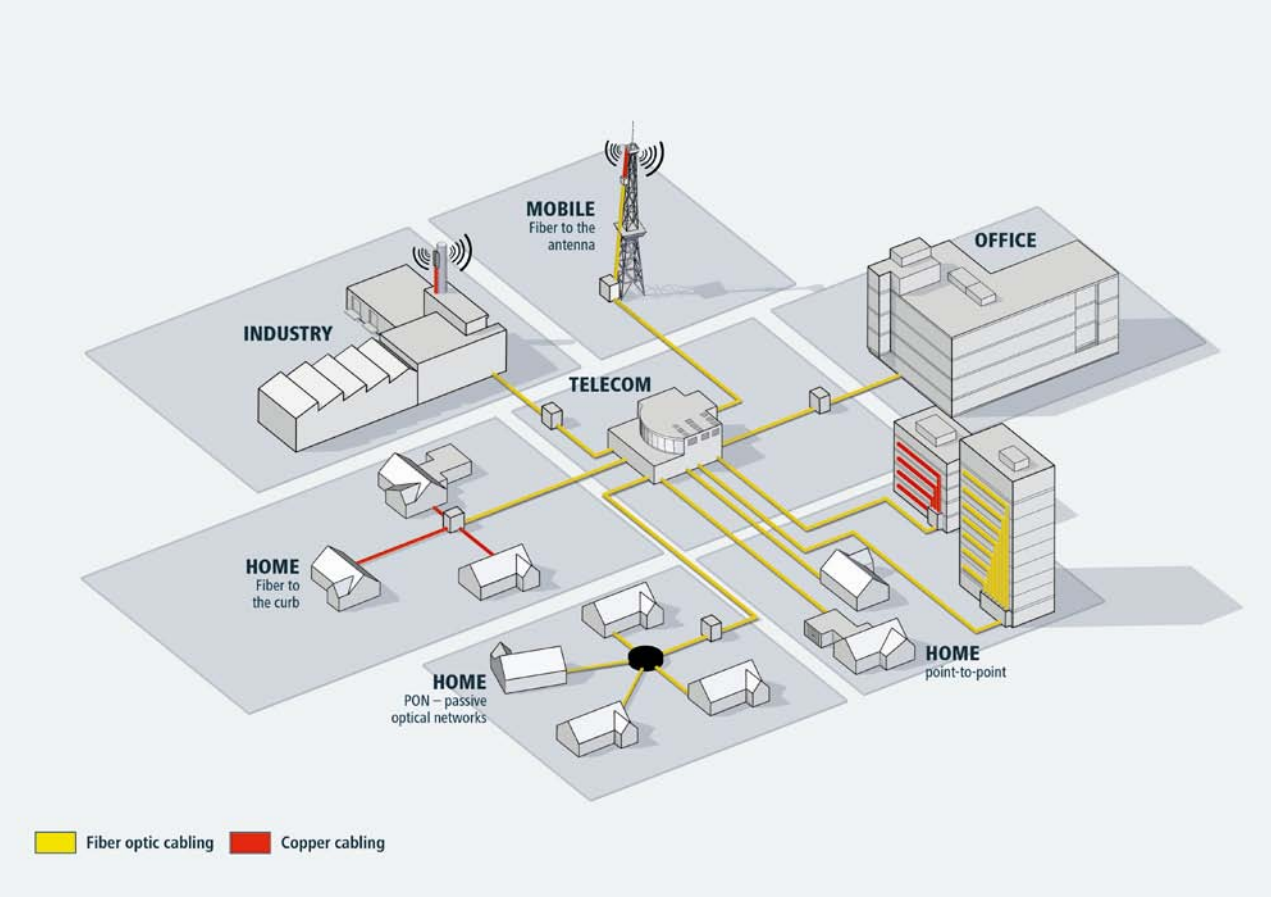

Migration path from copper based to FTTX networks

Data Center Infrastructure

In data centers, fiber optic cables for high data rates have become standard. Most commonly used are OM3 and OM4 fibers which can transmit data rates of 10, 40 and 100 Gbps according to the standard IEEE 802.3. Highest quality, flexibility and minimum disruptions at the same time are the demands for today's data center infrastructure.
To address this challenging environment, Telegärtner offers pre-terminated solutions. Cables with 12, 24, or 48 fibers are terminated with 12-fiber MPO connectors or with duplex LC or duplex SC connectors. A major benefit of pre-terminated cables is that they can be installed whenever data center processes allow, very often even during live operations. Whenever new servers, switches, or mainframes are installed or moved, the pre-terminated cables are already in place, ready for service. Time consuming cable cutting and stripping, connectorization, curing, and polishing belong to the past. Pulling grips protect the connectors during cable installation and guarantee factory-proven quality even under rough installation conditions.

Pre-terminated cables
MTP® / MPO – MTP® / MPO (left) and MTP®/ MPO – duplex LC (right)

Pre-terminated cabling systems are not limited to optical fibers. More and more pre-terminated copper solutions are used. Such solutions are available with RJ45 jacks for patch panels as well as with stranded cabling and RJ45 plugs as multi plug cables, which can save a lot of time when uses for large switches.

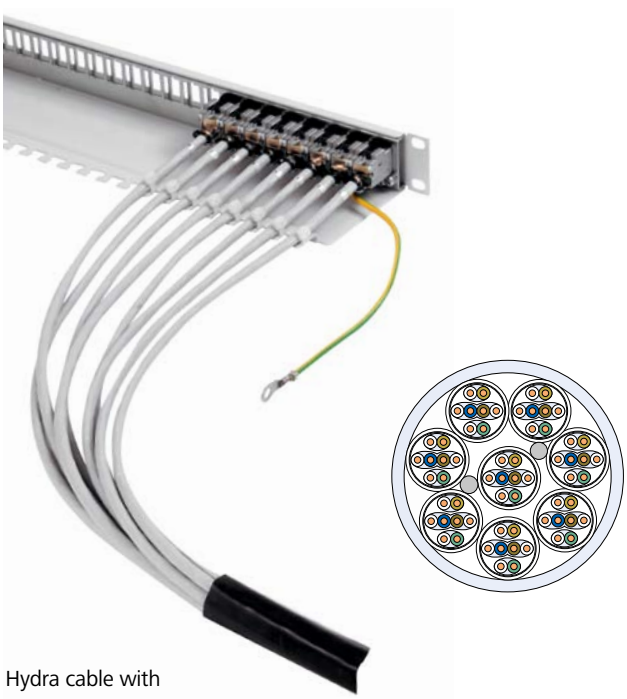

Hydra cable with
AMJ module K Cat.6$_A$

Parallel Optics and 40/100 Gigabit Ethernet

The bandwidth of multimode fibers is much smaller than the one of singlemode fibers. For shorter link lengths, multimode fibers are used as the electronics for multimode application is much cheaper than the electronics for singlemode fibers.

With 40 and 100 Gigabit Ethernet, the data streams are divided into channels of 10 Gbps which are transmitted simultaneously ("parallel"), which led to the term parallel optics. 40 Gigabit Ethernet uses 8 optical fibers (4 fibers for transmitting, 4 fibers for receiving), 100 Gigabit Ethernet uses 20 of them (10 fibers for transmitting, 10 fibers for receiving). The MTP®/MPO connector, which is already used for pre-terminated cables, will also be used for parallel optics.

Contact us at datacenter@telegaertner.com.

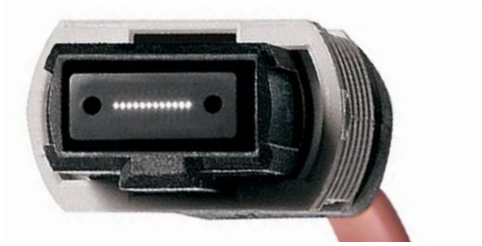

MPO connector

Telegärtner's tip: Pre-terminated cables can be installed whenever data center processes allow, very often even during live operations. Whenever new servers, switches, or mainframes are installed or moved, the pre-terminated cables are already in place, ready for service. Time consuming cable cutting and stripping, connectorization, curing, polishing or crimping. And the online configurator is at you service at any time.

Industrial Ethernet

The harsh environments of plants and workshops put much more stress on the components than the office environment does: Dust, moisture, chemicals, mechanical stress, extreme temperatures and much higher electromagnetic interference lead to specifications which were unknown and unrivalled in the past. At the same time, plants and workshops demand highest possible reliability and availability, as even short service interruptions lead to high losses.

One hour downtime of a PC in an office is annoying; one hour downtime of a production line is not acceptable as it inevitably means losing enormous amounts of money. Especially in the industrial environment quality and reliability of the components – above all outlets and connectors – are exceptionally important and in most cases mission-critical. So it's no wonder that for industrial applications different standards apply, e.g. ISO/IEC 24702 for the cabling and IEC 61076-3-106 for the connectors.

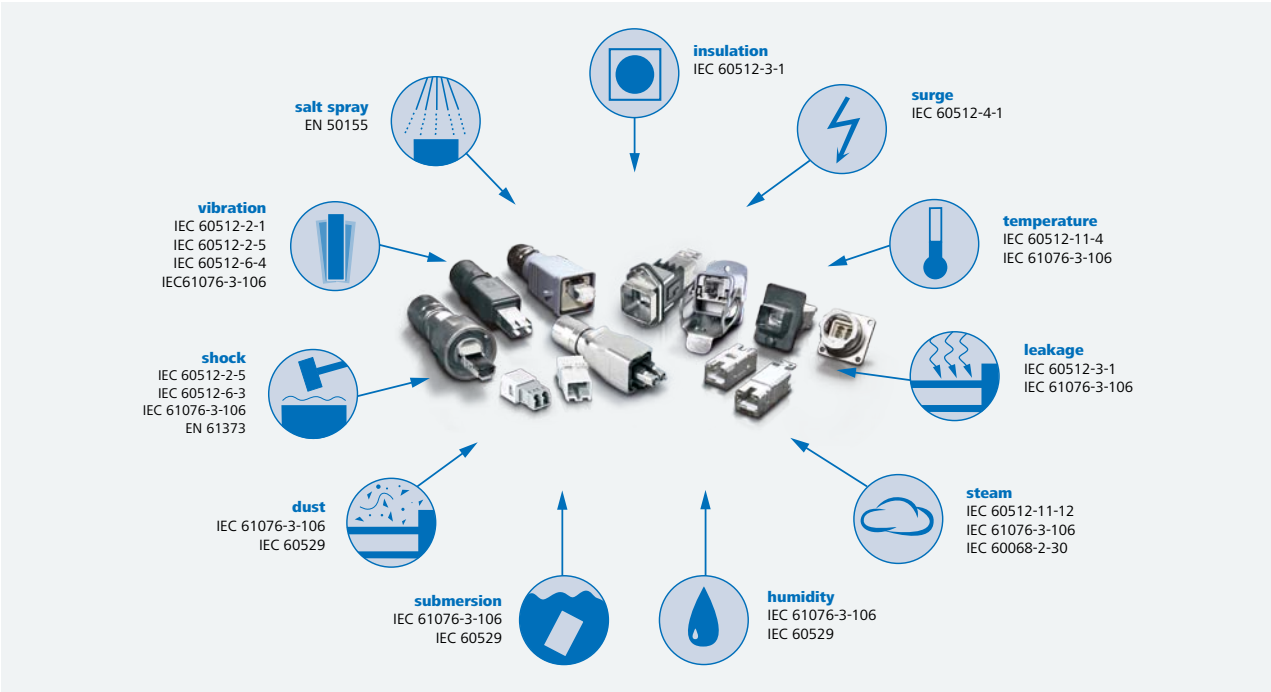

Protection against foreign bodies Protection against water

Protection against touch and foreign bodies*	
First Code Number	**Description**
0	No particular protection
1	Protection against ingress of solid foreign bodies with a diameter over 50 mm
2	Protection against solid foreign bodies with a diameter over 12,5 mm Protection against vertically dripping
3	Protection against ingress of solid foreign bodies with a diameter over 2,5 mm
4	Protection against ingress of solid foreign bodies with a diameter over 1,0 mm
5	Dust protected
6	Dust-proof

Protection against water*	
Second Code Number	**Description**
0	No particular protection
1	Protection against dripping water
2	Protection against vertically dripping water. There must be no harmful effect on materials tipped (in a container) up to 15° from it is normal position
3	Protection against fine water spray
4	Protection against water spray
5	Protection against water jet
6	Protection against strong water spray jet
7	Protection against water, when the material is immersed in water
8	The material is suitable for continous submersion in water

* Definitions see IEC 60529

Telegärtner Network Dictionary

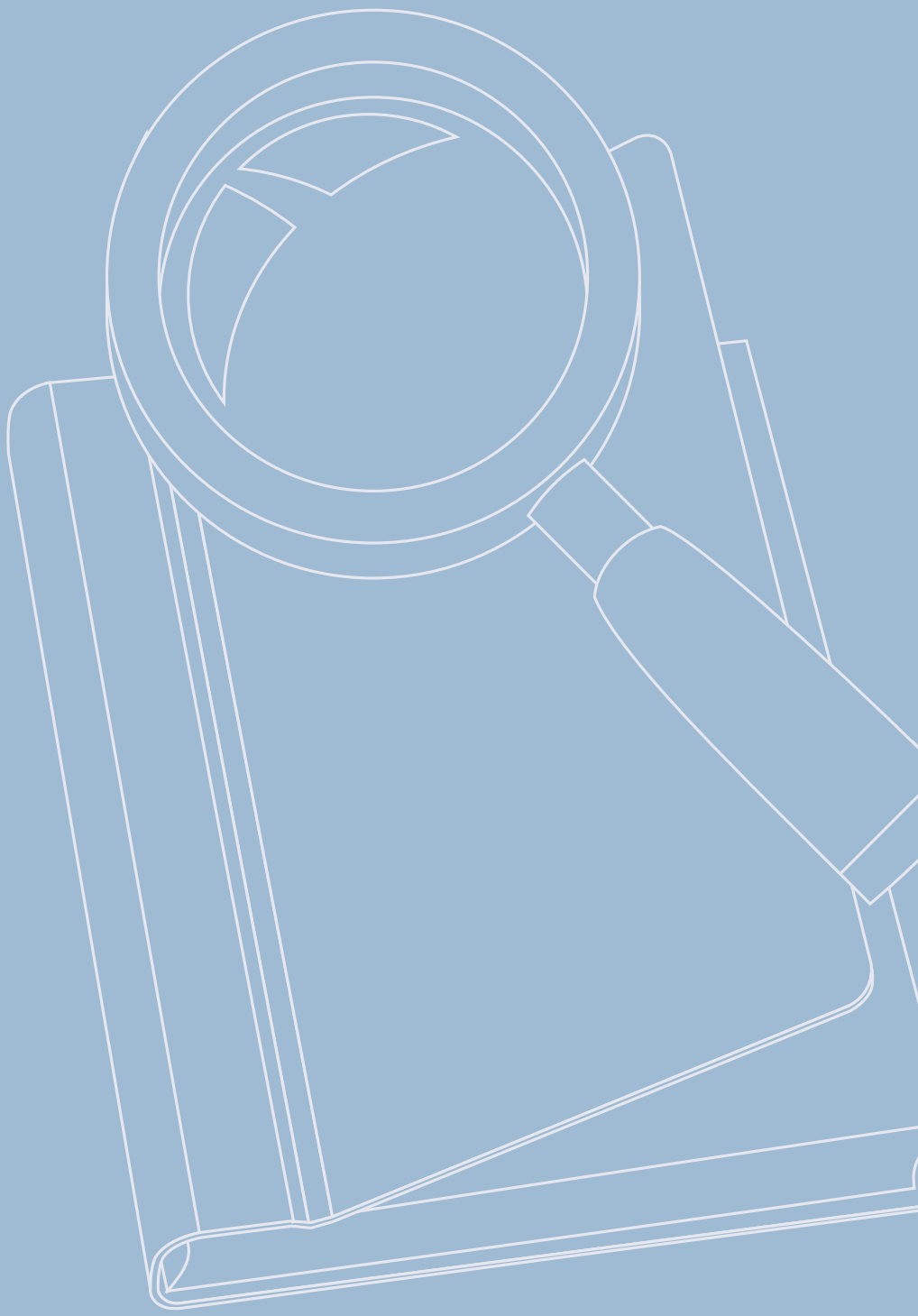

Telegärtner Network Dictionary: fiber optic technology

The most important terms regarding data and networking technology are as follows.

Adaptors
Adaptors are used to align two fiber optic connectors. Optical fibers can't be fixed in jacks like copper wires. Two fibers are connected either by splicing them together or by pushing two connectors together. To do this, adaptors are needed to align the connectors precisely for mimimum signal loss. "Fiber optic jacks" offered by some manufacturers do have some kind of connector and adaptor inside.

APC – aspherical physical contact
Connectors with angled end-faces angle typically 8 degrees, other angles are also possible. Angled end-faces cause very low reflection, which results in excellent return loss margins. APC connectors always have to be connected to other APC connectors with the same angle. Connector and adaptor colour: green

Attenuation
Travelling along an optical fiber or passing a connector, a signal loses some of its power. Attenuation is measured as the ratio of input power to output power.

Backbone
A connection between networks or cabling areas, e.g. the cables that run between the distributors in a building or between buildings.

Bandwidth
The range of frequencies that can be transmitted; e.g. lowest frequency = 10 MHz, highest frequency = 100 MHz, then the total bandwidth is 90 MHz (100 MHz – 10 MHz = 90 MHz). With optical fibers, the term bandwith is often used for the product of freqency times length, i.e. MHz x km, which is constant. For example, a fiber with a usable bandwidth of 400 MHz x km means that a signal using a frequency range of 400 MHz can travel 1 km along the fiber, a signal using 800 MHz can only travel half a kilometer, a signal using 200 MHz can travel 2 km, and so on.

Break-out cable
Multifiber cable with each fiber being individually buffered. Fibers of break-out cables can be routed away from the cable without the need for additional protection. Typical buffer diameters are 900 µm and 3 mm, so connectors can be mounted directly without having to use a buffer kit or splicing.

Building backbone
EN 50173 specifies three main cabling areas:
Campus backbone = the cabling between buildings
Building backbone = the cabling between the floors in a building
Horizontal cabling = the cabling on a floor in a building, also referred to as "premises-specific cabling subsystem"

Cabling layer
The ISO reference model for Open System Interconnection does not specify the cabling. On Layer 1, connectors and interfaces are specified, but the cabling itself is NOT specified in layer 1, even though many people think so. In order to have a relationship between the cabling and the ISO model, an artificial "cabling layer" ("layer 0") was introduced, but this layer is not part of the original ISO model.

Campus backbone
EN 50173 specifies three main cabling areas:
Campus backbone = the cabling between buildings
Building backbone = the cabling between the floors in a building
Horizontal cabling = the cabling on a floor in a building, also referred to as "premises-specific cabling subsystem"

Campusnet
The backbone network connecting the building / presmises networks.

Channel
Complete cabling between two electronic devices, e.g. between a switch and a PC, including the patch cords.

Consolidation point link
Part of the cabling from the patch panel to the consolidation point, including the cable and the connecting hardware but not the patch cords.

CWDM – Coarse Wavelength Division Multiplexing
Transmission technology using several optical signals of different wavelengths at the same time in one fiber. Channel spacing 20 nm.

Delay
Measured in ns/km; the time a signal needs to pass a given length on a cable.

DIN connector
Old fiber optic connector type with a union nut; nowadays used almost only in legacy cabling installations; standardized term is LSA connector; outer diameter of the ferrule is 2.5 mm.

DIN VDE 0888-3
Defines the short terms for fiber optic outdoor cables in Germany; as these short terms are very comprehensive and straight-forward, they are often used outside of Germany as well.

DIN VDE 0888-6
Defines the short terms for fiber optic indoor cables in Germany; as these short terms are very comprehensive and straight-forward, they are often used outside of Germany as well.

Dual-duplex connection
Connection with transmitting and receiving simultaneously using only one fiber.

Duplex
"Double"; duplex connectors are used for two optical fibers. Depending on the connector type, two individual connectors can be put together using a clamp or a clip.

Duplex connection
Connection with transmitting and receiving simultaneously.

DWDM – Dense Wavelength Division Multiplexing
Transmission technology using several optical signals (typically 32) of different wavelengths at the same time in one fiber. The channels are much narrower or are much closer together when compared with CWDM.

E-2000 Compact
Small form factor (SFF) duplex version of the E-2000 connector; registered trademark of Diamond. → *See also E-2000 connector*

E-2000 connector
Very precise fiber optic connector with integrated shutter and laser protection flap; mainly used for WAN (wide area network) applications; registered trademark of Diamond; standardized as LSH connector; outer diameter of the ferrule is 2.5 mm.

Easy strip fiber
Special kind of tight buffer construction for easy removing of the fiber buffer. Cables with easy strip fibers are the ideal choice when the same cable type shall be used for splicing as well as for direct connectorization.

EN 50173
"Information technology – Generic cabling systems"; most important set of standards in Europe for structured cabling. EN 50 173 consists of five parts:

Part 1: General requirements
part 2: Office premises
part 3: Industrial premises
part 4: Residential premises
part 5: Data centers

ESCON connector
Old duplex fiber optic connector type for applications in the data center; nowadays used almost only in legacy cabling installations.

FC/PC connector
Old fiber optic connector type with a union nut; nowadays used almost only in legacy cabling installations; FC stands for ferrule connector, PC for physical contact; outer diameter of the ferrule is 2.5 mm.

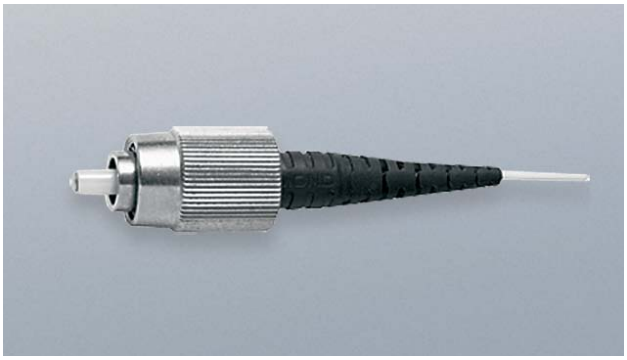

Ferrule
Tube containing the optical fiber in a connector; made of zirconia, metal or plastic.

FSMA connector
Old fiber optic connector type with a union nut; nowadays used almost only in legacy cabling installations; outer diameter of the ferrule is 2.5 mm.

FTTA – Fiber to the antenna
Fiber optic cables run to wireless base stations.

FTTA – Fiber to the amplifier
Fiber optic cables run to street cabinets containing electronic equipment like amplifiers.

FTTB – Fiber to the building
Fiber optic cables run to a building (inside of the building, copper cabling is used);
→ *See also FTTH – Fiber to the home*

FTTC – Fiber to the curb
Fiber optic cables run to street cabinets, located near the curb.

FTTD – Fiber to the desk
Fiber optic cables run to desks people work at.

FTTF – Fiber to the factory
Fiber optic cables run to factory buildings.

FTTH – Fiber to the home
Fiber optic cables run to fiber optic wall outlets in homes.

FTTL – Fiber to the loop
General term for fiber optic cabling in the access network.

FTTM – Fiber to the machine
Fiber optic cables run to machines in a factory building.

FTTN – Fiber to the node
Fiber optic cables run to nodes or distribution points; term is mainly used for passive optical networks (PON) with FTTH – Fiber to the home.

FTTO – Fiber to the office
Fiber optic cables run to office blocks; similar to FTTH – Fiber to the home.

FTTP – Fiber to the premises
Fiber optic cables run to buildings or the properties.

FTTR – Fiber to the radio
Fiber optic cables run to transmitters of wireless base stations;
→ *See also FTTA – Fiber to the antenna*

FTTT – Fiber to the terminal
Fiber optic cables run to workstations or terminals, e.g. to PCs.

FTTW – Fiber to the wall or Fiber to the workgroup
Fiber optic cables run to small switches near groups of desks, e.g. mini switches in cable raceways.

Full-duplex connection
Connection with transmitting and receiving simultaneously.

Graded-index fiber
Multimode fiber with an index of refraction that progressively increases towards the center of the fiber. Graded-index fibers have become the only relevant type of multimode fiber.

Half-duplex connection
Connection with alternate transmitting and receiving. Both, transmitting and receiving are possible, but only one at a time.

High return loss
Connector with excellent return loss margins; can be achieved by special polishing or other methods.

Horizontal cabling
EN 50173 specifies three main cabling areas:
Campus backbone = the cabling between buildings
Building backbone = the cabling between the floors in a building
Horizontal cabling = the cabling on a floor in a building, also referred to as "premises-specific cabling subsystem"

HRL
→ *See high return loss*

ISO
International Organization for Standardization.

ISO model
Also called "ISO reference model". Communication in a telecommunications network is divided into seven logical layers according to ISO/IEC 7498-1.

ITU
International Telecommunication Union.

LAN
Acronym for local area network, a data network at a defined place, typically inside of a building.

Layer 0
→ *See Cabling layer*

Layer 1
→ *See Physical Layer*

LC connector
Small form factor connector with excellent optical margins; preferred connector in new installations; duplex version for two fibers available, size and handling similar to the RJ45 connector used for twisted pair cabling; depending on the source, LC has different meanings; the most common ones are Lampert connector and Lucent connector; outer diameter of the ferrule is 1.25 mm, which makes a very small connector size possible.

LC duplex connector
Connector for two optical fibers, combination of two individual LC connectors; the individual connectors can be either fixed together or just held together with a clip.

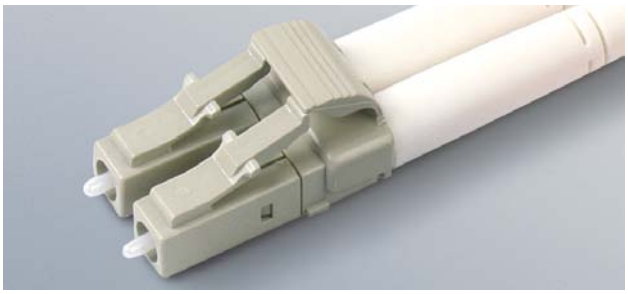

Link
Cabling between two defined points in a channel, e.g. permanent link or consolidation point link, see there.

Local area network
→ *See LAN*

Loose tube cable
Special kind of cable construction, where the coated fibers lay in a plastic tube. As the fibers are not surrounded by an individual jacket ("buffer"), the fibers cannot be directly connectorized. Stripping is easy as there is no buffer. Typical coating diameter is 250 µm.

LSA connector
Old fiber optic connector type with a union nut; nowadays used almost only in legacy cabling installations; also called DIN connector; outer diameter of the ferrule is 2.5 mm.

LSF/OH
Acronym for low smoke and fume / zero halogen.
→ *See LSZH*

LSH connector
Standardized term for the E-2000 connector, *see there.*

LSOH
Acronym for low smoke zero halogen.
→ *See LSZH*

LSZH
Acronym for low smoke and fume / zero halogen; cables with flame retardent jackets, which produce very low smoke and don't emit toxic halogens in the case of a fire.

MAN
Acronym for metropolitan area network, the network that connects buildings or campuses across a city.

Mbit/s
→ *See Mbps*

Mbps
Acronym for Megabits per second, unit for the data rate; 1 Mbps = 1 million bits per second.

Metropolitan area network
→ *See MAN*

MHz
Acronym for Megahertz, unit for cycles per time;
1 MHz = 1 million cycles per second.

MIC connector
Rather large fiber optic connector; was used in old FDDI networks, hardly used anymore.

Moore's law
There are several statements of Gordon Moore which have bevome famous as Moore's law. One of them is: "Every five years add a zero", which means that the bandwidth needed grows by the factor of 10 every five years.

MP connector
Old term for MPO connector, *see there.*

MPO connector
Multi-fiber connector for up to 72 optical fibers; most common is the version for 12 fibers. The fibers are arranged in parallel in a wide plastic ferrule; two connectors are aligned by metal pins in one connector which fit into the holes of the other connector, the acronym MPO stands for multi-fiber push on.

MT-RJ connector
Duplex connector; the two fibers are arranged in parallel in a plastic ferrule; two connectors are aligned by metal pins in one connector which fit into the holes of the other connector; the acronym MT-RJ stands for mechanical transfer – registered jack.

MTP® connector
Multi-fiber connector; "MTP®" is a registered trademark of US Conec; the MTP® connector is compatible (and nearly identical) with the MPO connector.

Multimode fiber
Optical fiber that – simply explained – transmits multiple rays of light ("modes") simultaneously, whereas in a singlemode fiber only one ray ("mode") is transmitted. Singlemode fibers can be used for much longer distances than multimode, but the electronic equipment for singlemode applications is much more expensive than equipment for mulimode applications. Typical link length with multimode fiber are several hundred meters compared to several kilometers with singlemode fibers.

NT – network termination
Termination of the cables that run into a building.

OAN – optical access network
Fiber optic network that connects buildings to street cabinets.

OLT – optical line termination
Termination of a fiber optic cable that runs from a street cabinet into a building.

ONT – optical network termination
Termination of a fiber optic cable entering a building.

ONU – optical network unit
Electronic equipment with fiber optic connection between the access network outside of and the LAN inside of a building.

PC - physical contact
Acronym for physical contact, which means the end-faces of fiber optic connectors are plain and have physical contact to one another when the connectors are aligned in the adaptor. Connector and adaptor colour: blue

Permanent link
End-to-end part of the cabling from patch panel to outlet, including the cable but not the patch cords.

Patch cord
Flexible cord with connectors on both ends.

Patch panel
Group of jacks arranged in a panel in a rack or cabinet to terminate cables.

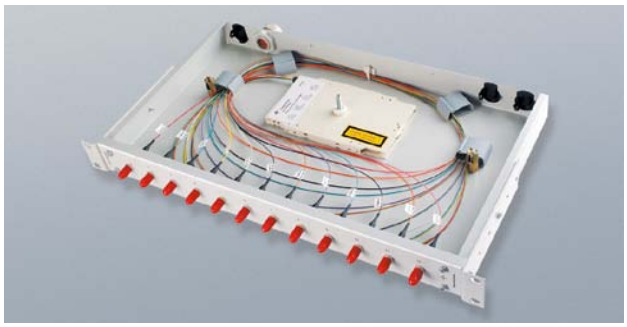

Physical layer
Layer 1 in the ISO model, specifies connectors and interfaces. The cabling itself is NOT specified in layer 1, even though many people think so. In order to have a relationship between the cabling and the ISO model, an artificial "layer 0" ("cabling layer") was introduced, but this layer is not part of the original ISO model.

Pigtail
A short piece of optical fiber of a few meters length with a factory-polished connector on one end. The other end is blunt to splice the pigtail to a fiber of a cable and thus terminate the cable's fiber.

PON – passive optical network
Fiber optic access network with passive ("non-electric" / "non-electronic") equipment like splitters.

Primary coating
Thin plastic coating that surrounds the glass of the optical fiber. The primary coating is applied immediately after the glass fiber is produced. The outer diameter of a glass fiber typically is 125 µm, with primary coating it is 250 µm.

SAN
Acronym for storage area network; the SAN is the network that connects storage devices with the servers using SAN switches.

SC connector
Very popular fiber optic connector; was used to replace the ST connector in many installations, but gets more and more replaced by the LC connector itself, as the LC is much smaller and offers better margins; duplex version for two fibers available; SC stands for subscriber connector; outer diameter of the ferrule is 2.5 mm.

SC-DC connector
Fiber optic connector that looks like an SC connector but uses only one ferrule for two optical fibers; NOT compatible with the standard SC connector; SC-DC stands for SC Dual Contact; nowadays used almost only in legacy data center installations, in new installations the LC connector is preferred; outer diameter of the ferrule is 2.5 mm.

SC duplex connector
Connector for two optical fibers, combination of two individual SC connectors; the individual connectors can be either fixed together or just held together with a clip.

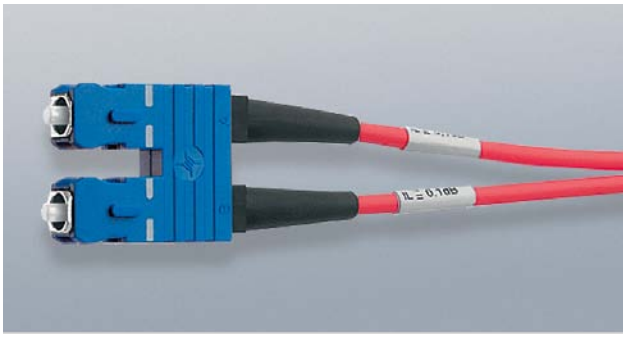

SC-QC connector
Fiber optic connector that looks like an SC connector but uses only one ferrule for four optical fibers; NOT compatible with the standard SC connector; SC-QC stands for SC Quad Contact or SC Quarto Contact; very rarely used in legacy installations, not used in new installations; outer diameter of the ferrule is 2.5 mm.

Secondary coating
Plastic coating that covers the primary coating of an optical fiber.

SFF – small form factor
General term for small fiber optic connectors; in most cases, the duplex version of such connectors is not larger than an RJ45 connector used for copper cabling.

Signal
Physical realisation of information travelling along the media, e.g. a series of Zeros and Ones realized by different voltage levels or light pulses on a cable.

Singlemode fiber
Optical fiber that – simply explained – transmits just one ray of light ("mode"), whereas in a multimode fiber only multiple rays ("modes") are transmitted simultaneously.

Singlemode fibers can be used for much longer distances than multimode fibers, but the electronic equipment for singlemode applications is much more expensive than the equipment for mulimode applications.

Splice
Permanent joint of of two optical fibers. With a mechanical splice, the fibers are pushed together mechanically; with a fusion splice, the fibers are welded together.

ST connector
Connector with a bayonet housing. The ST connector used to be very common, but it got replaced by the SC connector in most installations.

ST stands for straight tip; outer diameter of the ferrule is 2.5 mm.

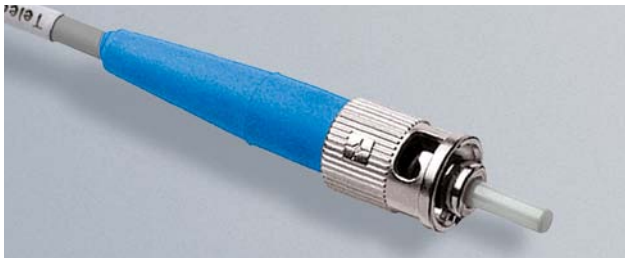

Step index fiber
Optical fiber with an index of refraction that increases in one large step towards the center of the fiber. With multimode fibers, the step index fiber has been replaced by graded-index fibers with a progressive increase, and for singlemode applications, fibers with a specially engineered index of refraction are preferred.

Storage area network
→ *See SAN*

TIA
TIA is an acronym for Telecommunications Industry Association, an American standards body that authors and publishes telecommunications and cabling standards in the USA.

Tight buffer
Special kind of cable construction, where each fiber is surrounded by an individual jacket ("buffer"). As the buffer is very tight around the fiber, the fibers can be directly connectorized, but the fibers can be stripped only in short lengths.

Should the tight buffer cable be used for direct connectorization and splicing as well, easy strip fibers should be used, as for splicing larger parts of the buffer have to be removed. Typical buffer diameters are 900 µm and 3 mm.

Two way concept
Cabling concept where two cables are routed in different ways between two points in order to increase availibility by redundancy.

VF-45 connector
Standardized term for the Volition connector, *see there.*

Volition connector
Duplex connector; the two fibers are arranged in V-grooves and are pressed against the fibers in the jack when connected; registered trademark of 3M.

WAN
Acronym for wide area network; the WAN is the network which connects other networks nationally and / or internationally.

Wavelength multiplexing
Simultaneous transfer of multiple modes ("rays of light") of different wavelengths ("colors").

Wide area network
→ *See WAN*

Telegärtner Network Dictionary: copper technology

ACR – attenuation to crosstalk ratio
The ratio of crosstalk attenuation to attenuation.
ACR represents the quality of a link much better than crosstalk attenuation or attenuation alone, because the ratio reflects a possible compensation far better, e.g. an excellent crosstalk attenuation compensates for a mediocre attenuation or vice versa.

American wire gauge
→ *See AWG*

Attenuation
Travelling along a cable or passing a connector, a signal loses some of its power. Attenuation is measured as the ratio of input power to output power.

Attenuation to crosstalk ratio
→ *See ACR*

AWG – American wire gauge
American unit of measure for the cross-sectional area of a wire. The most important AWGs in the IT arena are (deviations possible!):

AWG:	22	23	24	26
Cross-sectional area in mm²:	0.322	0.259	0.203	0.127
Outer diameter in mm:	0.643	0.574	0.511	0.404

Backbone
A connection between networks or cabling areas, e.g. the cables that run between the distributors in a building or between buildings.

Balanced cable
In balanced cables, the two conductors are similar. Twisted pair cables are the most important type of balanced cable. Because the conductors look alike, a balanced cable is also called a symmetrical cable. An example for an unbalanced (unsymmetrical) cable is a coaxial cable, with the two conductors differing a lot from each other. To connect balanced and unbalanced cables, a balun (acronym made of BALanced / UNbalanced) is needed.

Balun
Acronym made of BALanced-UNbalanced for symmetrical (balanced) cables like twisted pair cables and unsymmetrical (unbalanced) coaxial cables. Baluns convert symmetrical signals into unsymmetrical ones and vice versa and act as an adaptor between twisted pair and coaxial cabling.

Bandwidth
The range of frequencies that can be transmitted; e.g. lowest frequency = 10 MHz, highest frequency = 100 MHz, then the total bandwidth is 90 MHz (100 MHz – 10 MHz = 90 MHz).

Building backbone
EN 50173 specifies three main cabling areas:

Campus backbone = the cabling between buildings
Building backbone = the cabling between the floors in a building
Horizontal cabling = the cabling on a floor in a building, also referred to as "premises-specific cabling subsystem"

Cable sharing
With cable sharing, a four pair twisted pair cable is used for multiple outlets. Cable sharing was common with 10 and 100 Mbps Ethernet, as just two pairs were needed per link, and so one four pair cable could be used for a double outlet. As Gigabit and 10 Gigabit Ethernet use four pairs for one link, cable sharing is not common anymore.

Cable terminology according to ISO/IEC 11801
ISO/IEC 11801 classifies cables according to the kind of shielding. The classification scheme is „x/yTP", with „x" meaning the overall screen, „y" the shielding of the individual pairs.

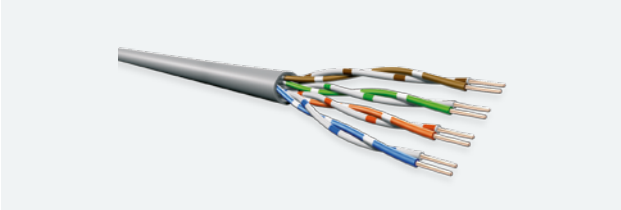

U/UTP: unshielded twisted pair; no shielding at all

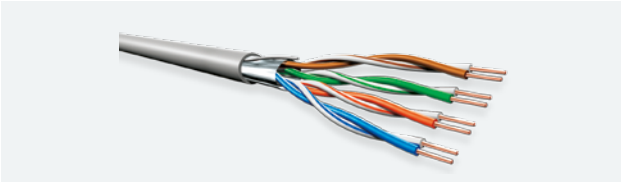

F/UTP: foil screened unshielded twisted pair; overall screen made of metal foil; also referred to as FTP cable

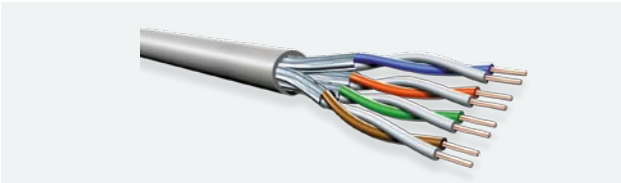

U/FTP: no overall screen, pairs are individually shielded by metal foil

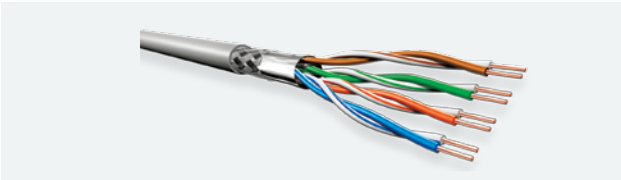

SF/UTP: braid and foil screened unshielded twisted pair; overall screen made of braid and metal foil

S/FTP: braid screened shielded twisted pair; overall braid screen made, pairs individually shielded by metal foil. Most common type of shielded cable; also referred to as PiMF (pairs in metal foil).

Cabling layer
The ISO reference model for Open System Interconnection does not specify the cabling. On Layer 1, connectors and interfaces are specified, but the cabling itself is NOT specified in layer 1, even though many people think so. In order to have a relationship between the cabling and the ISO model, an artificial "cabling layer" ("layer 0") was introduced, but this layer is not part of the original ISO model.

Campus backbone
EN 50173 specifies three main cabling areas:
Campus backbone = the cabling between buildings
Building backbone = the cabling between the floors in a building
Horizontal cabling = the cabling on a floor in a building, also referred to as "premises-specific cabling subsystem"

Campusnet
The backbone network connecting the building / premises networks.

Cat. 5 / Cat. 5e
→ *See Category 5 / category 5E*

Cat. 6
→ *See Category 6*

Cat. 6_A / Cat. 6A
→ *See Category 6_A*

Cat. 7
→ *See Category 7*

Cat. 7_A
→ *See Category 7_A*

Category
Components are classified by categories according to their performance, links and channels are classified by classes. At the moment, category 5 (100 MHz / 1 Gbps) up to category 7_A (1000 MHz /10 Gbps) are common.

Category 5 / category 5E
Performance category for individual components for frequencies up to 100 MHz and data rates up to 1 Gbps. The international standard ISO/IEC 11801 specifies the requirements for Category 5 (Cat. 5), in Europe the standard series EN 50173 is used. ANSI EIA/TIA 568C specifies the requirements for Category 5e („enhanced category 5", also referred to as Category 5E), but they apply only in the USA and Canada; some requirements of TIA differ from the ones specified in ISO/IEC 11801 and EN 50173.

Categories are only used for individual components. ISO/IEC and EN classify the performance of permanent link and channel as classes, the terms in TIA differ from that:

EN: category 5
ISO/IEC: category 5
TIA: category 5e

Permanent link (cabling between patch panel and outlet):
EN: class D permanent link
ISO/IEC: class D permanent link
TIA: category 5e permanent link

Channel (entire cabling including patch cords):
EN: class D channel
ISO/IEC: class D channel
TIA: category 5e channel

Category 6
Performance category for individual components for frequencies up to 250 MHz and data rates up to 1 Gbps. The international standard ISO/IEC 11801 specifies the requirements for Category 6 (Cat. 6), in Europe the standard series EN 50173 is used. ANSI EIA/TIA 568C also specifies the requirements for a Category 6, but they apply only in the USA and Canada; some requirements of TIA differ from the ones specified in ISO/IEC 11801 and EN 50173. Categories are only used for individual components. ISO/IEC and EN classify the performance of permanent link and channel as classes, the terms in TIA differ from that:

EN: category 6
ISO/IEC: category 6
TIA: category 6

Permanent link (cabling between patch panel and outlet):
EN: class E permanent link
ISO/IEC: class E permanent link
TIA: category 6 permanent link

Channel (entire cabling including patch cords):
EN: class E channel
ISO/IEC: class E channel
TIA: category 6 channel

Category 6_A
Performance category for individual components for frequencies up to 500 MHz and data rates up to 10 Gbps. The international standard ISO/IEC 11801 specifies the requirements for Category 6_A (Cat. 6_A), in Europe the standard series EN 50173 is used. ANSI EIA/TIA 568C specifies the requirements for Category 6A, but they apply only in the USA and Canada; some requirements of TIA differ from the ones specified in ISO/IEC 11801 and EN 50173. TIA uses the "A" in normal script, ISO/IEC an EN in subscript "$_A$" Categories are only used for individual components.

ISO/IEC and EN classify the performance of permanent link and channel as classes, the terms in TIA differ from that:

EN: category 6_A
ISO/IEC: category 6_A
TIA: category 6A

Permanent link (cabling between patch panel and outlet):
EN: class E_A permanent link
ISO/IEC: class E_A permanent link
TIA: category 6A permanent link

Channel (entire cabling including patch cords):
EN: class E_A channel
ISO/IEC: class E_A channel
TIA: category 6A channel

Category 7
Performance category for individual components for frequencies up to 600 MHz and data rates up to 10 Gbps. The international standard ISO/IEC 11801 specifies the requirements for Category 7 (Cat. 7), in Europe the standard series EN 50173 is used. The American ANSI EIA/TIA 568C specifies no requirements for a Category 7. Categories are only used for individual components. ISO/IEC and EN classify the performance of permanent link and channel as classes, the terms in TIA differ from that:

EN: category 7
ISO/IEC: category 7
TIA: not specified

Permanent link (cabling between patch panel and outlet):
EN: class F permanent link
ISO/IEC: class F permanent link
TIA: not specified

Channel (entire cabling including patch cords):
EN: class F channel
ISO/IEC: class F channel
TIA: not specified

Category 7_A
Performance category for individual components for frequencies up to 1,000 MHz and data rates up to 10 Gbps. The international standard ISO/IEC 11801 specifies the requirements for Category 7_A (Cat. 7_A), in Europe the standard series EN 50173 is used. The American ANSI EIA/TIA 568C specifies no requirements for a Category 7_A. Categories are only used for individual components. ISO/IEC and EN classify the performance of permanent link and channel as classes, the terms in TIA differ from that:

EN: category 7_A
ISO/IEC: category 7_A
TIA: not specified

Permanent link (cabling between patch panel and outlet):
EN: class F_A permanent link
ISO/IEC: class F_A permanent link
TIA: not specified

Channel (entire cabling including patch cords):
EN: class F_A channel
ISO/IEC: class F_A channel
TIA: not specified

Category 8
Some cable manufacturers use the term "category 8" for cables which exceed the requirements of category 7 and are also specified for a frequency range far beyond 1,000 MHz. "Category 8" is just a term used by marketing divisions, at the moment no standards committee is working on such a category.

The related performance class for installed links would be "class G", but no standards committee works on such a class either.

Channel
Complete cabling between two electronic devices, e.g. between a switch and a PC, including the patch cords.

Class
Components are classified by categories according to their performance, links and channels are classified by classes.

At the moment, category 5 (100 MHz / 1 Gbps) up to category 7 (600 MHz / 10 Gbps) are common.

Class D
→ *See Category 5 / category 5E*

Class E
→ *See Category 6*

Class E_A
→ *See Category 6_A*

Class F
→ *See Category 7*

Class F_A
→ *See Category 7_A*

Class G
→ *See Category 8*

Consolidation point link
Part of the cabling from the patch panel to the consolidation point, including the cable and the connecting hardware but not the patch cords.

Crosstalk
Crosstalk means that the signal travelling along one pair of a cable can be detected on an adjacent pair as well. The term originally comes from the telephony systems, were crosstalk meant that one could listen to someone else talking over another cable pair.

Delay
Measured in ns/km; the time a signal needs to pass a given length on a cable.

Delay skew
Measured in ns; the time difference signals travelling along different pairs within the same cable arrive at the receiver.

DIN VDE 0815
German standard specifying indoor telephony cables and their terminology.

DIN VDE 0816
German standard specifying outdoor telephony cables and their terminology.

Dual-duplex connection
Connection with transmitting and receiving simultaneously using only one pair.

Duplex connection
Connection with transmitting and receiving simultaneously.

EAD Connector
Old connector design, used for uninteruptable sockets fitted with two BNC jacks in coaxial Ethernet wiring systems (10 Base-2. EAD is german and stands for Ethernet Access Socket); the TAE connector for wiring to telephone sockets has a similar design,however the EAD connector had two differently positioned mechanical codings (code „E"), which prevented any inadvertent connection with the telephone connector. The subsequent, better screened successor to the EAD system was called the scEAD connector (scEAD = screened EAD connector), which used a metal sheet as screen. The inventor and developer of the EAD/scEAD connector was Telegärtner.


Picture: scEAD

ELFEXT – equal level FEXT
A signal travelling along a cable gets attenuated. The crosstalk at the far end of the cable is much lower than it would be if the signal arrived at the receiver with its original strength. As field testers also measure the signal attenuation and the length of a cable, both can be taken into consideration as well when measuring FEXT, the far end crosstalk attenuation.
→ *See FEXT – far end crosstalk attenuation*

EN 50173
"Information technology – Generic cabling systems"; most important set of standards in Europe for structured cabling.
EN 50 173 consists of five parts:
Part 1: General requirements
part 2: Office premises
part 3: Industrial premises
part 4: Residential premises
part 5: Data centers

Enhanced Cat. 5
→ *See Category 5 / Category 5E*

Equal level FEXT
→ *See ELFEXT – equal level FEXT*

Far End ACR
ACR measured at the far end of a cable. → *See ACR – attenuation to crosstalk ratio*

Far end crosstalk attenuation
→ *See FEXT – far end crosstalk attenuation*

FEXT – far end crosstalk attenuation
Crosstalk attenuation at the far end of a cable. Crosstalk attenuation is a measure of how much of a signal is detected on another pair. Crosstalk is unwanted, so it is suppressed by cable construction. The measure of its suppression (or attenuation) is called crosstalk attenuation.

FTP
Acronym for foil screened twisted pair; twisted pair cable with one or more shields made of metal foil. In most cases, there is just one overall foil screen; in some cables, the pairs are individually shielded by metal foil and the overall screen is omitted. Details like this are in the data sheet of the cable.
→ *See also Cable terminology according to ISO/IEC 11801.*

F/UTP
Acronym for foil screened unshielded twisted pair; a F/UTP cable has an overall foil screen, the pairs themselves are not shielded individually. Also referred to as FTP.
→ *See also Cable terminology according to ISO/IEC 11801.*

Full-duplex connection
Connection with transmitting and receiving simultaneously.

Half-duplex connection
Connection with alternate transmitting and receiving. Both, transmitting and receiving are possible, but only one at a time.

Horizontal cabling
EN 50173 specifies three main cabling areas:
Campus backbone = the cabling between buildings
Building backbone = the cabling between the floors in a building
Horizontal cabling = the cabling on a floor in a building, also referred to as "premises-specific cabling subsystem"

ICS connector
Old connector with four pins used with the IBM cabling system ICS for Token Ring cabling. ICS uses 150 Ohm STP cabling, but the standard EN 50173 specifies 100 Ohm cabling. To connect ICS devices to structures cabling according to EN 50173, a balun is needed to convert the impedances.

Impedance
Opposition a cabling component offers to an electromagnetic wave travelling along or crossing the component; impedance is frequency-dependant, i.e. the impedance of a component changes with frequency changes.

ISO
International Organization for Standardization.

ISO model
Also called "ISO reference model". Communication in a telecommunications network is divided into seven logical layers according to ISO/IEC 7498-1.

LAN
Acronym for local area network, a data network at a defined place, typically inside of a building.

Layer 0
→ *See Cabling layer*

Layer 1
→ *See Physical Layer*

Link
Cabling between two defined points in a channel, e.g. permanent link or consolidation point link, → *See there*.

local area network
→ *See LAN*

LSF/OH
Acronym for low smoke and fume / zero halogen, → *See LSZH.*

LSOH
Acronym for low smoke zero halogen, → *See LSZH.*

LSZH
Acronym for low smoke and fume / zero halogen; cables with flame retardent jackets, which produce very low smoke and don't emit toxic halogens in the case of a fire.

Mbit/s
→ *See Mbps*

Mbps
Acronym for Megabits per second, unit for the data rate;
1 Mbps = 1 million bits per second.

MHz
Acronym for Megahertz, unit for cycles per time;
1 MHz = 1 million cycles per second.

Moore's law
There are several statements of Gordon Moore which have bevome famous as Moore's law. One of them is: "Every five years add a zero", which means that the bandwidth needed grows by the factor of 10 every five years.

Near end crosstalk attenuation
→ *See NEXT – near end crosstalk attenuation*

Network termination
→ *See NT – network termination*

NEXT – near end crosstalk attenuation
Crosstalk attenuation at the near end of a cable. Crosstalk attenuation is a measure of how much of a signal is detected on another pair. Crosstalk is unwanted, so it is suppressed by cable construction. The measure of its suppression (or attenuation) is called crosstalk attenuation.

NT – network termination
Termination of an outside plant cable entering a building.

Patch cord
Flexible cord with connectors on both ends.

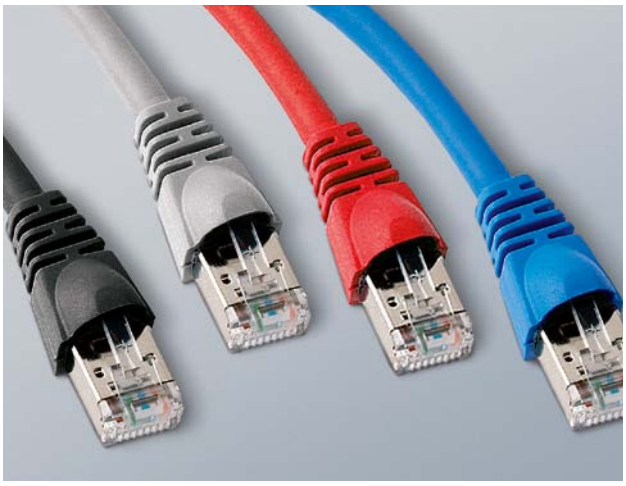

Patch panel
Group of jacks arranged in a panel in a rack or cabinet to terminate cables.

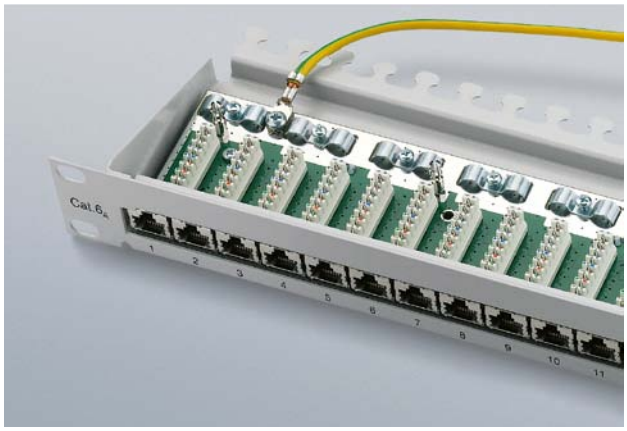

Permanent link
End-to-end part of the cabling from patch panel to outlet, including the cable but not the patch cords.

Physical layer
Layer 1 in the ISO model, specifies connectors and interfaces. The cabling itself is NOT specified in layer 1, even though many people think so. In order to have a relationship between the cabling and the ISO model, an artificial "layer 0" ("cabling layer") was introduced, but this layer is not part of the original ISO model.

PiMF cable
Acronym for pairs in metal foil; in a PiMF cable, the pairs are shielded individually by metal foil. The cable may or may not have overall screen, in most cases, it has one made of braid.
→ *See also Cable terminology according to ISO/IEC 11801.*

PowerSum ACR
→ *See PSCAR – PowerSum ACR*

PowerSum ELFEXT
→ *See PSELFEXT – PowerSum ELFEXT*

PowerSum NEXT
→ *See PSNEXT – PowerSum NEXT*

PSACR – PowerSum ACR
High-speed data networks like Gigabit Ethernet and 10 Gigabit Ethernet use all four pairs of a cable simultaneously. All the noise between the pairs has to be summed up, as every pair has three adjacent pairs which cause interferences.

The term PowerSum stands for the summing-up of induced noise. PowerSum ACR stands for summing up all possible noise and interferences within one cable as far as ACR is concerned.

PSELFEXT – PowerSum ELFEXT
High-speed data networks like Gigabit Ethernet and 10 Gigabit Ethernet use all four pairs of a cable simultaneously. All the noise between the pairs has to be summed up, as every pair has three adjacent pairs which cause interferences.

The term PowerSum stands for the summing-up of induced noise. PowerSum ELFEXT stands for summing up all possible noise and interferences within one cable as far as ELFEXT is concerned.

PSNEXT – PowerSum NEXT
High-speed data networks like Gigabit Ethernet and 10 Gigabit Ethernet use all four pairs of a cable simultaneously. All the noise between the pairs has to be summed up, as every pair has three adjacent pairs which cause interferences.

The term PowerSum stands for the summing-up of induced noise. PowerSum NEXT stands for summing up all possible noise and interferences within one cable as far as NEXT is concerned.

RJ10
The acronym RJ stands for registered jack, but it is often used without its formal relationship to USOC (Universal Service Ordering Code). The usual RJ10 connector has four pins and is often used for the small cable that connects the receiver to a standard telephone.

RJ11
The acronym RJ stands for registered jack, but it is often used without its formal relationship to USOC (Universal Service Ordering Code). The usual RJ11 connector has six pins and is often used for the patch cord that connects a telephone or fax machine to an outlet. Very often, a patch cord with an RJ11 connector is plugged into an RJ45 jack.
The RJ45 jack is a bit larger than the RJ11 plug and has eight contacts, and so the outer contacts of the RJ45 jack get damaged by the edges of the smaller plug. Jacks made by Telegärtner have an integrated protection against overbending the contacts when a smaller connector like an RJ11 is plugged mistakenly into is.

RJ12
The acronym RJ stands for registered jack, but it is often used without its formal relationship to USOC (Universal Service Ordering Code). The usual RJ12 connector has six pins and is often used for the patch cords that connects a telephone or fax machine to an outlet. Very often, a patch cord with an RJ12 connector is plugged into an RJ45 jack.

The RJ45 jack is a bit larger than the RJ12 plug and has eight contacts, and so the outer contacts of the RJ45 jack get damaged by the edges of the smaller plug. Jacks made by Telegärtner have an integrated protection against overbending the contacts when a smaller connector like an RJ12 is plugged mistakenly into is.

RJ45
The acronym RJ stands for registered jack, but it is often used without its formal relationship to USOC (Universal Service Ordering Code). The RJ45 is specified by the IEC 60603-7 set of standards:

IEC 60603-7: Detail specification for 8-way, unshielded, free and fixed connectors
IEC 60603-7-1: Detail specification for 8-way, shielded, free and fixed connectors
IEC 60603-7-2: Connectors up to 100 MHz / Cat. 5, unshielded
IEC 60603-7-3: Connectors up to 100 MHz / Cat. 5, shielded
IEC 60603-7-4: Connectors up to 250 MHz / Cat. 6, unshielded
IEC 60603-7-41: Connectors up to 500 MHz / Cat. 6_A, unshielded
IEC 60603-7-5: Connectors up to 250 MHz / Cat. 6, shielded
IEC 60603-7-51: Connectors up to 500 MHz / Cat. 6_A, shielded

IEC 60603-7-7: Connectors up to 600 MHz / Cat. 7, shielded
(this standard specifies the GG45 connector; the jack is backwards compatible to the RJ45 plug, but the GG45 plug is NOT compatible to RJ45 jacks)

IEC 60603-7-71: Connectors up to 1,000 MHz / Cat. 7_A, shielded
(this standard specifies the GG45 connector; the jack is backwards compatible to the RJ45 plug, but the GG45 plug is NOT compatible to RJ45 jacks.)

The RJ45 has become the dominant connector for the major types of data networks. Even older network types like Token Ring or TP-PMD (FDDI over copper) use the RJ45 – at least their later releases do so. The most important pin assignments are (source: Treiber: Praxishandbuch Netzwerktechnik, courtesy of J. Schlembach Fachverlag Wilburgstetten)

10Base-T:	1-2, 3-6
100Base-TX:	1-2, 3-6
1000Base-T:	1-2, 3-6, 4-5, 7-8
Token Ring:	3-6, 4-5
ISDN:	3-6, 4-5
ATM:	1-2, 7-8
TP-PMD:	1-2, 7-8

On the sides of the IDC blocks of the jacks color codes are printed to make pin assignment during installation easier. There are two options: T568A and T568B. Originally, T568A was invented for military and federal applications but has become common also for civil projects. More often, T568B is used. EN 50173 specifies only pin/pair assignment but does not specify any color codes.

Very often, a patch cord with an RJ11 or RJ12 connector is plugged into an RJ45 jack. The RJ45 jack is a bit larger than the RJ11 or RJ12 plug and has eight contacts, and so the outer contacts of the RJ45 jack get damaged by the edges of the smaller plug. Jacks made by Telegärtner have an integrated protection against overbending the contacts when a smaller connector like an RJ11 or an RJ12 is plugged mistakenly into it.

SAN
Acronym for storage area network; the SAN is the network that connects storage devices with the servers using SAN switches.

scEAD connector
screened EAD connector, *see there.*

SF/UTP
Acronym for braid and foil screened unshielded twisted pair; an SF/UTP cable has two overall screens, one made of copper braid, one made of metal foil; the pairs themselves are not shielded individually.
→ *See also Cable terminology according to ISO/IEC 11801.*

S/FTP
Acronym for screened shielded twisted pair; an S/FTP cable has an overall braid screen, the pairs are shielded individually with metal foil. Most common type of shielded cable. Also referred to as PiMF (pairs in metal foil).
→ *See also Cable terminology according to ISO/IEC 11801.*

Signal
Physical realisation of information travelling along the media, e.g. a series of Zeros and Ones realized by different voltage levels on a cable.

Storage area network
→ *See SAN*

STP
Acronym for shielded twisted pair; general term for shielded twisted pair cables. In most cases, the pairs of a shielded cable are shielded individually with metal foil.

There are also cables with only one overall foil screen, sometimes the overall screen is made of tinned copper braid. Details on this can be found in the data sheet of the cable.

→ *See also Cable terminology according to ISO/IEC 11801.*

TAE connector
TAE is an acronym for the German words „Teilnehmer-Anschluss-Einheit“, which means “user connection unit”. The TAE connector is a common connector used to connect telephones and fax machines. A TAE connector can have up to 6 pins, but in most cases, only 4 of them are used. Guidance strips run along the connector on both sides, either in the middle of the connector (TAE-N) or at the bottom (TAE-F), which eliminates wrong connections. F coded connectors are used for telephones, N codes ones for non-telephone devices like answering or fax machines.

Typically, three position outlets like TAE-NFN are used to connect answering machine (left jack), telephone (middle) and fax machine (right jack) using just one faceplate. F connections are always superior to N connections. This makes it possible to answer a telephone call after the answering machine has already started recording. Telegärtner played a significant role in the development of the TAE connector.

Thin Wire
Old term for the coaxial Ethernet 10Base-2; the name comes from the thin coaxial cable which replaced the much thicker Yellow Cable in many installations.

TIA
TIA is an acronym for Telecommunications Industry Association, an American standards body that authors and publishes telecommunications and cabling standards in the USA.

TIA/EIA 568A
Complete title: ANSI/TIA/EIA-568-A
Set of American cabling standards; replaced the former standard TIA/EIA 568, got replaced by ANSI/TIA/EIA-568-B, which got replaced by ANSI/TIA/EIA-568-C itself.

TIA/EIA 568B
Complete title: ANSI/TIA/EIA-568-B
Set of American cabling standards; replaced the former standard ANSI/TIA/EIA-568-A, got replaced by ANSI/TIA/EIA-568-C.

TIA 568C
Complete title: ANSI/TIA-568-C. Set of American cabling standards, replaced the former standard ANSI/TIA/EIA-568-B. ANSI/TIA-568-C consists of four parts:

ANSI/TIA-568-C-0: Generic Telecommunications Cabling for Customer Premises
ANSI/TIA-568-C-1: Commercial Building Telecommunications Cabling Standard
ANSI/TIA-568-C-2: Balanced Twisted-Pair Telecommunication Cabling and Components Standard
ANSI/TIA-568-C-3: Optical Fiber Cabling and Components Standard

Twisted pair
Technical short term for data cables with twisted pairs.

Two way concept
Cabling concept where two cables are routed in different ways between two points in order to increase availibility by redundancy.

Type 1 cable
Old S/FTP cable type with two pairs used with the IBM cabling system (ICS); impedance was 150 Ohms compared to the common shielded data cables (category 3 to category 7) with 100 Ohms.

UTP
Acronym for unshielded twisted pair; general term for twisted pair cables without shielding.
→ *See also Cable terminology according to ISO/IEC 11801.*

U/FTP
Acronym for unscreened foil shielded twisted pair; a U/FTP cable has no overall screen, but the pairs are shielded individually with metal foil.
→ *See also Cable terminology according to ISO/IEC 11801.*

U/UTP
Acronym for unscreened, unshielded twisted pair; a U/UTP cable has no shielding at all.
→ *See also Cable terminology according to ISO/IEC 11801.*

Unbalanced cable
In unbalanced cables, the two conductors differ from each other. Most important unbalanced cable type is coaxial cable.

Because the conductors do not look alike, an unbalanced cable is also called an unsymmetrical cable.

An example for a balanced (symmetrical) cable is a twisted pair cable, where the two conductors are similar. To connect balanced and unbalanced cables, a balun (acronym made of BALanced / UNbalanced) is needed.

WLAN
Acronym for wireless LAN, general term for data networks using radio technology to transmit data. The most important international WLAN types are standardized by IEEE 802.11.

Yellow Cable
Old term for the original coaxial Ethernet 10Base-5; the name comes from the thick, yellow coaxial cable which had to be used.

Discover the world of Telegärtner

Best contacts for your success

Telegärtner offers professional solutions for all aspects of structured building cabling and industrial ethernet as well as a wide range of RF connectors. Order your personal catalogue copies.

DATA VOICE OFFICE

Networking components for office applications.

COAX

RF components and much more.

DATA VOICE INDUSTRY

Networking components for industrial applications.

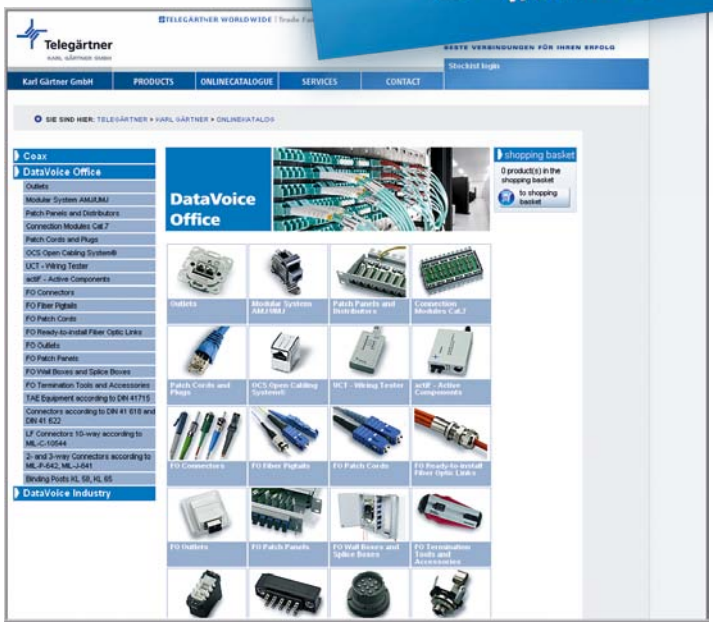

ONLINE CATALOGUES AND CONFIGURATORS

Get detailled information on our products in our online catalogue and create your cable assemblies and FO patch panels using our online configurators. **Visit us at www.telegaertner.com**

Telegärtner
Karl Gärtner GmbH

Lerchenstr. 35
D-71144 Steinenbronn

Telefon: +49 (0) 71 57 / 1 25-100
Telefax: +49 (0) 71 57 / 1 25-120

E-Mail: info@telegaertner.com
Web: www.telegaertner.com

T00013A0228 08/2011